Version 1.0
March 2021
702P08627

Xerox® B310 Printer User Guide

xerox™

© 2021 Xerox Corporation. All rights reserved. Xerox® and Xerox and Design®are trademarks of Xerox Corporation in the United States and other countries.

Adobe®, Adobe PDF logo, Adobe® Reader®, Adobe® Type Manager®, ATM™, Flash®, Macromedia®, Photoshop®, and PostScript® are trademarks or registered trademarks of Adobe Systems, Inc.

Apple®, Bonjour®, EtherTalk™, TrueType®, iPad®, iPhone®, iPod®, iPod touch®, AirPrint® and the AirPrint Logo®, Mac®, Mac OS®, and Macintosh® are trademarks or registered trademarks of Apple Inc. in the U.S. and other countries.

Gmail™ webmail service, and Android™ mobile technology platform are trademarks of Google, Inc.

HP-GL®, HP-UX®, and PCL® are registered trademarks of Hewlett-Packard Corporation in the United States and/or other countries.

IBM® and AIX® are registered trademarks of International Business Machines Corporation in the United States and/or other countries.

McAfee®, ePolicy Orchestrator®, and McAfee ePO™ are trademarks or registered trademarks of McAfee, Inc. in the United States and other countries.

Microsoft®, Windows Vista®, Windows®, Windows Server®, and OneDrive® are registered trademarks of Microsoft Corporation in the United States and other countries.

Mopria is a trademark of the Mopria Alliance.

PANTONE® and other Pantone, Inc. trademarks are the property of Pantone, Inc.

UNIX® is a trademark in the United States and other countries, licensed exclusively through X/ Open Company Limited.

Linux® is a registered trademark of Linus Torvalds.

Wi-Fi CERTIFIED Wi-Fi Direct® is a trademark of the Wi-Fi Alliance.

PCL® is a registered trademark of the Hewlett-Packard Company. PCL is a designation of a set of printer commands (language) and functions included in its printer products. This printer is intended to be compatible with the PCL language. This means the printer recognizes PCL commands used in various application programs, and that the printer emulates the functions corresponding to the commands.

All other trademarks are the property of their respective owners.

Table of Contents

1 Safety 9

Conventions 10
Product Statements 11
Maintenance Safety 14
Consumable Information 15

2 Learn About the Printer 17

Printer configuration 18
Using the control panel 19
Understanding the status of the indicator light 20
Selecting paper 21
Paper guidelines 21
Paper characteristics 21
Unacceptable paper 22
Selecting preprinted forms and letterhead 22
Storing paper 23
Supported paper sizes 23
Supported paper types 25
Supported paper weights 26

3 Set up, Install, and Configure 27

Selecting a location for the printer 28
Attaching cables 29
Loading paper and specialty media 30
Setting the Paper Size and Type 30
Configuring Universal paper settings 30
Loading Trays 30
Loading the Multipurpose Feeder 32
Installing and Updating Software, Drivers, and Firmware 34
Installing the Software 34
Updating Firmware 37
Exporting or importing a configuration file 38
Networking 39
Connecting the Printer to a Wi-Fi Network 39
Connecting the printer to a wireless network using Wi-Fi Protected Setup (WPS) 39
Configuring Wi-Fi Direct 39
Connecting a mobile device to the printer 40
Connecting a computer to the printer 40
Deactivating the Wi-Fi network 41

Checking the printer connectivity 41
Printing the Menu Settings Page 42

4 Secure the Printer 43

Locating the Security Slot 44
Erasing printer memory 45
Restoring factory default settings 46
Statement of Volatility 47

5 Print 49

Printing from a Computer 50
Printing from a Mobile Device 51
Printing from a Mobile Device using Mopria™ Print Service 51
Printing from a Mobile Device Using AirPrint® 51
Printing from a Mobile Device using Wi-Fi Direct® 51
Printing a font sample list 53
Placing separator sheets between copies 54
Canceling a print job 55
From the printer control panel 55
From the computer 55
Adjusting toner darkness 56

6 Use Printer Menus 57

Menu map 58
Device 59
Preferences 59
Eco-Mode 60
Notifications 60
Power Management 62
Restore Factory Defaults 63
Maintenance 63
About this Printer 66
Print 67
Layout 67
Setup 68
Quality 69
PostScript 70
PCL 70
Image 72
Paper 73
Tray Configuration 73
Media Configuration 74
Network/Ports 76
Network Overview 76

Wireless ... 77
Wi-Fi Direct ... 80
Ethernet ... 80
TCP/IP ... 82
SNMP ... 83
IPSec ... 85
802.1x ... 86
LPD Configuration ... 86
HTTP/FTP Settings ... 87
USB ... 88
Restrict external network access ... 89
Security ... 90
Login Methods ... 90
Certificate Management ... 92
Login Restrictions ... 92
Erase Temporary Data Files ... 93
Miscellaneous ... 93
Reports ... 94
Menu Settings Page ... 94
Device ... 94
Print ... 94
Network ... 95
Troubleshooting ... 96

7 Maintain the Printer ... 97

Checking the Status of Parts and Supplies ... 98
Configuring supply notifications ... 99
Setting up e-mail alerts ... 100
Viewing reports ... 101
Ordering Parts and Supplies ... 102
Using Genuine Xerox Parts and Supplies ... 102
Replacing parts and supplies ... 103
Replacing the Toner Cartridge ... 103
Replacing the imaging unit ... 105
Replacing the tray ... 107
Cleaning printer parts ... 108
Cleaning the printer ... 108
Saving energy and paper ... 109
Configuring the power save mode settings ... 109
Conserving supplies ... 109
Moving the printer to another location ... 110

8 Troubleshoot a Problem ... 111

Print quality problems ... 112
Printing problems ... 113

Print quality is poor 113
Print jobs do not print 142
Slow printing 143
Job prints from the wrong tray or on the wrong paper 146
The printer is not responding 147
Network connection problems 149
Cannot open Embedded Web Server 149
Cannot connect the printer to the Wi-Fi network 150
Issues with supplies 152
Replace cartridge, printer region mismatch 152
Non-Xerox Parts and Supplies 153
Clearing Jams 154
Avoiding Jams 154
Identifying Jam Locations 155
Paper Jam in the Standard Output Tray 156
Paper Jam in the Multipurpose Feeder 156
Paper Jam in Trays 159
Paper Jam in the Duplex Unit 163
Paper Jam in the Rear Door 166
Paper feed problems 168
Envelope Seals When Printing 168
Collated printing does not work 169
Tray linking does not work 170
Paper frequently jams 171
Jammed pages are not reprinted 172
Contacting customer support 173

A Regulatory Information 175

Basic Regulations 176
Noise Emission Levels 176
Static Sensitivity Notice 176
ENERGY STAR 176
Temperature Information 176
Información de la energía de México 177
Laser Notice 177
Power 177
Regulatory Notices for Wireless Products 178
Federal Communications Commission (FCC) Compliance Information Statement 179
Innovation, Science and Economic Development Canada Compliance Statement 180
Germany 181
Turkey RoHS Regulation 181
Ukraine RoHS Compliance 181
Material Safety Data Sheets 182

B Recycling and Disposal 183

Product Disposal and Recycling 184
North America 185
Xerox Green World Alliance 186
Waste from Electrical and Electronic Equipment (WEEE) Directive 187
India E-Waste notice 187

1

Safety

This chapter contains:

- Conventions 10
- Product Statements 11
- Maintenance Safety 14
- Consumable Information 15

Your printer and the recommended supplies have been designed and tested to meet strict safety requirements. Attention to the following information ensures the continued safe operation of your Xerox printer.

Conventions

Note: A note identifies information that could help you.

Warning: A warning identifies something that could damage the product hardware or software.

Caution: A caution indicates a potentially hazardous situation that could injure you.

Different types of statements include:

CAUTION—POTENTIAL INJURY: Indicates a risk of injury.

CAUTION—SHOCK HAZARD: Indicates a risk of electrical shock.

CAUTION—HOT SURFACE: Indicates a risk of burn if touched.

CAUTION—TIPPING HAZARD: Indicates a crush hazard.

CAUTION—PINCH HAZARD: Indicates a risk of being caught between moving parts.

CAUTION—MOVING PARTS: Indicates a risk of laceration or abrasion injuries from rotating parts.

Product Statements

CAUTION—POTENTIAL INJURY: To avoid the risk of fire or electrical shock, connect the power cord to an appropriately rated and properly grounded electrical outlet that is near the product and easily accessible.

CAUTION—POTENTIAL INJURY: To avoid the risk of fire or electrical shock, use only the power cord provided with this product or the manufacturer authorized replacement.

CAUTION—POTENTIAL INJURY: Do not use this product with extension cords, multi-outlet power strips, multi-outlet extenders, or UPS devices. The power capacity of these types of accessories can be easily overloaded by a laser printer and may result in a risk of fire, property damage, or poor printer performance.

CAUTION—POTENTIAL INJURY: Do not use this product with an inline surge protector. The use of a surge protection device may result in a risk of fire, property damage, or poor printer performance.

CAUTION—SHOCK HAZARD: To avoid the risk of electrical shock, do not place or use this product near water or wet locations.

CAUTION—SHOCK HAZARD: To avoid the risk of electrical shock, do not set up this product or make any electrical or cabling connections, such as the power cord, fax feature, or telephone, during a lightning storm.

CAUTION—POTENTIAL INJURY: Do not cut, twist, bind, crush, or place heavy objects on the power cord. Do not subject the power cord to abrasion or stress. Do not pinch the power cord between objects such as furniture and walls. If any of these things happen, a risk of fire or electrical shock results. Inspect the power cord regularly for signs of such problems. Remove the power cord from the electrical outlet before inspecting it.

CAUTION—SHOCK HAZARD: To avoid the risk of electrical shock, make sure that all external connections, such as Ethernet and telephone system connections, are properly installed in their marked plug-in ports.

CAUTION—SHOCK HAZARD: To avoid the risk of electrical shock, if you are accessing the controller board or installing optional hardware or memory devices sometime after setting up the printer, then turn the printer off, and unplug the power cord from the electrical outlet before continuing. If you have any other devices attached to the printer, then turn them off as well, and unplug any cables going into the printer.

CAUTION—SHOCK HAZARD: To avoid the risk of electrical shock when cleaning the exterior of the printer, unplug the power cord from the electrical outlet and disconnect all cables from the printer before proceeding.

CAUTION—POTENTIAL INJURY: If the printer weight is greater than 20kg (44lb), then it may require two or more people to lift it safely.

CAUTION—POTENTIAL INJURY: When moving the printer, follow these guidelines to avoid personal injury or printer damage:

- Make sure that all doors and trays are closed.
- Turn off the printer, and then unplug the power cord from the electrical outlet.
- Disconnect all cords and cables from the printer.
- If the printer has separate floor-standing optional trays or output options attached to it, then disconnect them before moving the printer.
- If the printer has a caster base, then carefully roll it to the new location. Use caution when passing over thresholds and breaks in flooring.
- If the printer does not have a caster base but is configured with optional trays or output options, then remove the output options and lift the printer off the trays. Do not try to lift the printer and any options at the same time.
- Always use the handholds on the printer to lift it.
- Any cart used to move the printer must have a surface able to support the full footprint of the printer.
- Any cart used to move the hardware options must have a surface able to support the dimensions of the options.
- Keep the printer in an upright position.
- Avoid severe jarring movements.
- Make sure that your fingers are not under the printer when you set it down.
- Make sure that there is adequate clearance around the printer.

CAUTION—TIPPING HAZARD: Installing one or more options on your printer or MFP may require a caster base, furniture, or other feature to prevent instability causing possible injury. For more information on supported configurations, contact the place where you purchased the printer.

CAUTION—TIPPING HAZARD: To reduce the risk of equipment instability, load each tray separately. Keep all other trays closed until needed.

CAUTION—HOT SURFACE: The inside of the printer might be hot. To reduce the risk of injury from a hot component, allow the surface to cool before touching it.

CAUTION—PINCH HAZARD: To avoid the risk of a pinch injury, use caution in areas marked with this label. Pinch injuries may occur around moving parts, such as gears, doors, trays, and covers.

CAUTION—POTENTIAL INJURY: This product uses a laser. Use of controls or adjustments or performance of procedures other than those specified in the User Guide may result in hazardous radiation exposure.

CAUTION—POTENTIAL INJURY: The lithium battery in this product is not intended to be replaced. There is a danger of explosion if a lithium battery is incorrectly replaced. Do not recharge, disassemble, or incinerate a lithium battery. Discard used lithium batteries according to the manufacturer instructions and local regulations.

This product is designed, tested, and approved to meet strict global safety standards with the use of specific manufacturer components. The safety features of some parts may not always be obvious. The manufacturer is not responsible for the use of other replacement parts.

Refer service or repairs, other than those described in the user documentation, to a service representative.

This product uses a printing process that heats the print media, and the heat may cause the media to release emissions. You must understand the section in your operating instructions that discusses the guidelines for selecting print media to avoid the possibility of harmful emissions.

This product may produce small amounts of ozone during normal operation, and may be equipped with a filter designed to limit ozone concentrations to levels well below the recommended exposure limits. To avoid high ozone concentration levels during extensive usage, install this product in a well-ventilated area and replace the ozone and exhaust filters if instructed to do so in the product maintenance instructions. If there are no references to filters in the product maintenance instructions, then there are no filters requiring replacement for this product.

SAVE THESE INSTRUCTIONS.

Maintenance Safety

Do not carry out any maintenance on this product that is not described in the customer documentation.

CAUTION—POTENTIAL INJURY: Do not use aerosol cleaners. Aerosol cleaners can be explosive or flammable when used on electromechanical equipment.

Use supplies and cleaning materials only as directed.

Do not remove the covers or guards that are fastened with screws. Customer service items are not located behind these covers.

In case of a Dry Ink or Toner Spill, use a broom or a wet cloth to wipe off spilled dry ink or toner. Sweep slowly to minimize generation of dust during clean up. Avoid using a vacuum. If a vacuum must be used, the unit should be designed for combustible dusts, having an explosion rated motor and non-conductive hose.

CAUTION—HOT SURFACE: The metallic surfaces in the fuser area are hot. Use caution when you remove paper jams from this area and avoid touching any metallic surfaces.

Consumable Information

CAUTION—POTENTIAL INJURY: When handling cartridges such as ink or fuser, avoid skin or eye contact. Eye contact can cause irritation and inflammation. Do not attempt to disassemble the cartridge. This can increase the risk of skin or eye contact.

Store all consumables in accordance with the instructions given on the package or container.

Keep all consumables away from the reach of children.

Never throw dry ink/toner, print cartridges, or dry ink/toner containers into an open flame.

For information on Xerox® supplies recycling programs, go to: https://www.xerox.com/recycling.

2

Learn About the Printer

This chapter contains:

- Printer configuration 18
- Using the control panel 19
- Understanding the status of the indicator light 20
- Selecting paper 21

Printer configuration

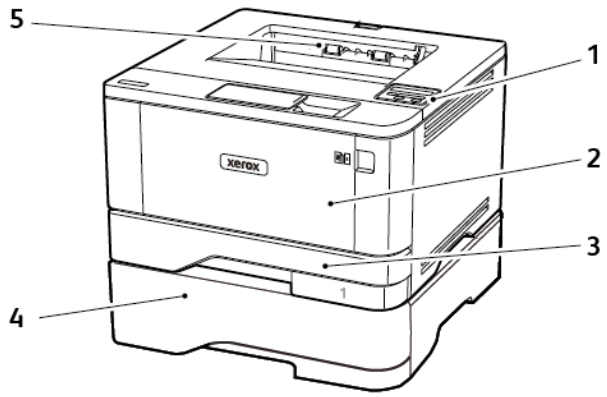

1. Control panel
2. Multipurpose feeder
3. Standard 250–sheet tray
4. Optional 550–sheet tray
5. Standard output tray

Using the control panel

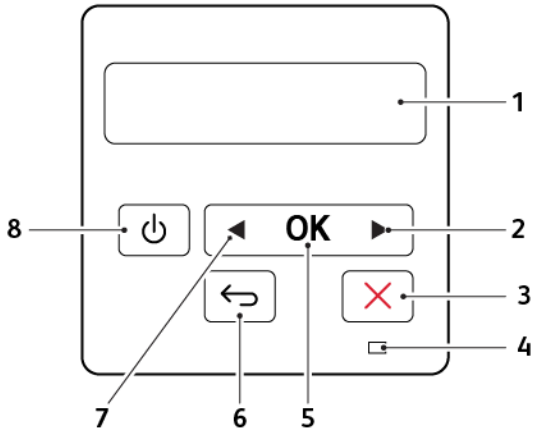

	Control panel part	Function
1	Display	• View printer messages and supply status. • Set up and operate the printer.
2	Right arrow button	• Scroll through menus or move between screens and menu options. • Increase the numeric value of a setting.
3	Stop or Cancel button	Stop the current job.
4	Indicator light	Check the status of the printer.
5	Select button	• Select a menu option. • Save the changes in a setting.
6	Back button	Return to the previous screen.
7	Left arrow button	• Scroll through menus or move between screens and menu options. • Decrease the numeric value of a setting.
8	Power button	Turn on or turn off the printer. To turn off the printer, press and hold the power button for five seconds.

Understanding the status of the indicator light

Indicator light	Printer status
Off	The printer is off or in Hibernate mode.
Blue	The printer is ready or processing data.
Blinking red	The printer requires user intervention.
Solid amber	The printer is in Sleep mode.

Selecting paper

Paper guidelines

Use the appropriate paper to prevent jams and help ensure trouble-free printing.

- Always use new, undamaged paper.
- Before loading paper, know the recommended printable side of the paper. This information is usually indicated on the paper package.
- Do not use paper that has been cut or trimmed by hand.
- Do not mix paper sizes, types, or weights in the same tray; mixing results in jams.
- Do not use coated papers unless they are specifically designed for electrophotographic printing.

Paper characteristics

The following paper characteristics affect print quality and reliability. Consider these factors before printing on them.

Weight

The standard tray can feed paper weights from 60 to 120g/m^2 (16 to 32 lb) grain long paper. Paper lighter than 60g/m^2 (16lb) may not be stiff enough to feed properly, and may cause jams.

Curl

Curl is the tendency for paper to curl at its edges. Excessive curl can cause paper feeding problems. Curl can occur after the paper passes through the printer, where it is exposed to high temperatures. Storing paper unwrapped in hot, humid, cold, or dry conditions can contribute to paper curling before printing and can cause feeding problems.

Smoothness

Paper smoothness directly affects print quality. If paper is too rough, toner cannot fuse to it properly. If paper is too smooth, it can cause paper feeding or print quality issues. We recommend the use of paper with 50 Sheffield points.

Moisture content

The amount of moisture in paper affects both print quality and the printer ability to feed the paper correctly. Leave paper in its original wrapper until you use it. Exposure of paper to moisture changes can degrade its performance.

Store paper in its original wrapper in the same environment as the printer for 24 to 48 hours before printing. Extend the time several days if the storage or transportation environment is very different from the printer environment. Thick paper may also require a longer conditioning period.

Grain direction

Grain refers to the alignment of the paper fibers in a sheet of paper. Grain is either *grain long*, running the length of the paper, or *grain short*, running the width of the paper.

For 60–120g/m^2 (16–32-lb) paper, grain long paper is recommended.

Fiber content

Most high-quality xerographic paper is made from 100 percent chemically treated pulped wood. This content provides the paper with a high degree of stability, resulting in fewer paper feeding problems and better print quality. Paper containing fibers such as cotton can negatively affect paper handling.

Unacceptable paper

The following paper types are not recommended for use with the printer:

- Chemically treated papers used to make copies without carbon paper, also known as carbonless papers, carbonless copy paper (CCP), or no carbon required (NCR) paper
- Preprinted papers with chemicals that may contaminate the printer
- Preprinted papers that can be affected by the temperature in the printer fuser
- Preprinted papers that require a registration (the precise print location on the page) greater than ±2.3mm (±0.9in.), such as optical character recognition (OCR) forms

  In some cases, registration can be adjusted with a software application to successfully print on these forms.
- Coated papers (erasable bond), synthetic papers, thermal papers
- Rough-edged, rough or heavily textured surface papers, or curled papers
- Recycled papers that fail EN12281:2002 (European)
- Paper weighing less than 60g/m^2 (16lb)
- Multiple-part forms or documents

Selecting preprinted forms and letterhead

- Use grain long paper.
- Use only forms and letterhead printed using an offset lithographic or engraved printing process.
- Avoid paper with rough or heavily textured surfaces.
- Use inks that are not affected by the resin in toner. Inks that are oxidation-set or oil-based generally meet these requirements; latex inks might not.
- Print samples on preprinted forms and letterheads considered for use before buying large quantities. This action determines whether the ink in the preprinted form or letterhead affects print quality.
- When in doubt, contact your paper supplier.
- When printing on letterhead, load the paper in the proper orientation for your printer. For more information, see the Paper and Specialty Media Guide.

Storing paper

Use these paper storage guidelines to help avoid jams and uneven print quality:

- Store paper in its original wrapper in the same environment as the printer for 24 to 48 hours before printing.
- Extend the time several days if the storage or transportation environment is very different from the printer environment. Thick paper may also require a longer conditioning period.
- For best results, store paper where the temperature is 21°C (70°F) and the relative humidity is 40 percent.
- Most label manufacturers recommend printing in a temperature range of 18–24°C (65–75°F) with relative humidity between 40 and 60 percent.
- Store paper in cartons, on a pallet or shelf, rather than on the floor.
- Store individual packages on a flat surface.
- Do not store anything on top of individual paper packages.
- Take paper out of the carton or wrapper only when you are ready to load it in the printer. The carton and wrapper help keep the paper clean, dry, and flat.

Supported paper sizes

Paper size	Standard 250-sheet tray	Optional 550-sheet tray	Multipurpose feeder	Two-sided printing
A4 210 x 297 mm (8.27 x 11.7 in.)	✓	✓	✓	✓
A5 Portrait (SEF) 148 x 210 mm (5.83 x 8.27 in.)	✓	✓	✓	X
A5 Landscape (LEF)[1] 210 x 148 mm (8.27 x 5.83 in.)	✓	✓	✓	X
A6 105 x 148 mm (4.13 x 5.83 in.)	✓	✓	✓	X
JIS B5 182 x 257 mm (7.17 x 10.1 in.)	✓	✓	✓	X

Paper size	Standard 250-sheet tray	Optional 550-sheet tray	Multipurpose feeder	Two-sided printing
Oficio (Mexico) 215.9 x 340.4 mm (8.5 x 13.4 in.)	✓	✓	✓	✓
Hagaki 100 x 148 mm (3.94 x 5.83 in.)	✓	X	✓	X
Statement 139.7 x 215.9 mm (5.5 x 8.5 in.)	✓	✓	✓	X
Executive 184.2 x 266.7 mm (7.25 x 10.5 in.)	✓	✓	✓	X
Letter 215.9 x 279.4 mm (8.5 x 11 in.)	✓	✓	✓	✓
Legal 215.9 x 355.6 mm (8.5 x 14 in.)	✓	✓	✓	✓
Folio 215.9 x 330.2 mm (8.5 x 13 in.)	✓	✓	✓	✓
Universal[3] 99 x 148 mm to 215.9 x 359.92 mm (3.9 x 5.83 in. to 8.5 x 14.17 in.)	✓	✓	✓	✓[2]
73/4 Envelope 98.4 x 190.5 mm (3.875 x 7.5 in.)	X	X	✓	X
9 Envelope 98.4 x 225.4 mm (3.875 x 8.9 in.)	X	X	✓	X
10 Envelope	X	X	✓	X

Paper size	Standard 250-sheet tray	Optional 550-sheet tray	Multipurpose feeder	Two-sided printing
104.8 x 241.3 mm (4.12 x 9.5 in.)				
DL Envelope 110 x 220 mm (4.33 x 8.66 in.)	X	X	✓	X
C5 Envelope 162 x 229 mm (6.38 x 9.01 in.)	X	X	✓	X
B5 Envelope 176 x 250 mm (6.93 x 9.84 in.)	X	X	✓	X
Other Envelope 98.4 x 162mm to 176 x 250mm (3.87 x 6.38in. to 6.93 x 9.84in.)	X	X	✓	X

[1] The default support is long-edge feed.

[2] Paper must be at least 210 mm (8.27 in.) wide and 279.4 mm (11 in.) long for two-sided printing.

[3] When Universal is selected, the paper is formatted for 215.90 x 355.60 mm (8.5 x 14 in.) unless specified by the application.

Supported paper types

Paper type	Standard 250-sheet tray	Optional 550-sheet tray	Multipurpose feeder	Two-sided printing
Plain paper	✓	✓	✓	✓
Card stock	X	X	✓	X
Recycled	✓	✓	✓	✓
Paper labels*	✓	✓	✓	X
Bond	✓	✓	✓	✓
Letterhead	✓	✓	✓	✓

Paper type	Standard 250-sheet tray	Optional 550-sheet tray	Multipurpose feeder	Two-sided printing
Preprinted	✓	✓	✓	✓
Colored Paper	✓	✓	✓	✓
Light Paper	✓	✓	✓	✓
Heavy Paper	✓	✓	✓	✓
Rough/Cotton	✓	✓	✓	✓
Envelope	X	X	✓	X
Rough envelope	X	X	✓	X
* One-sided paper labels are supported for occasional use of less than 20 pages per month. Vinyl, pharmacy, or two-sided labels are not supported.				

Supported paper weights

	Standard 250-sheet tray	Optional 550-sheet tray	Multipurpose feeder	Two-sided printing
Paper weight	60–120g/m^2 (16–32 lb)	60–120g/m^2 (16–32 lb)	60–217g/m^2 (16–58 lb)	60–90g/m^2 (16–24 lb)

3

Set up, Install, and Configure

This chapter contains:

- Selecting a location for the printer 28
- Attaching cables 29
- Loading paper and specialty media 30
- Installing and Updating Software, Drivers, and Firmware 34
- Networking 39
- Printing the Menu Settings Page 42

Selecting a location for the printer

- Leave enough room to open trays, covers, and doors and to install hardware options.
- Set up the printer near an electrical outlet.

CAUTION—POTENTIAL INJURY: To avoid the risk of fire or electrical shock, connect the power cord to an appropriately rated and properly grounded electrical outlet that is near the product and easily accessible.

CAUTION—SHOCK HAZARD: To avoid the risk of electrical shock, do not place or use this product near water or wet locations.

- Make sure that airflow in the room meets the latest revision of the ASHRAE 62 standard or the CEN Technical Committee 156 standard.
- Provide a flat, sturdy, and stable surface.
- Keep the printer:
  - Clean, dry, and free of dust
  - Away from stray staples and paper clips
  - Away from the direct airflow of air conditioners, heaters, or ventilators
  - Free from direct sunlight and humidity extremes
- Observe the recommended temperatures and avoid fluctuations.
  - Ambient temperature: 10 to 32.2˚C (50 to 90˚F)
  - Storage temperature: -40 to 40˚C (-40 to 104˚F)
- Allow the following recommended amount of space around the printer for proper ventilation:

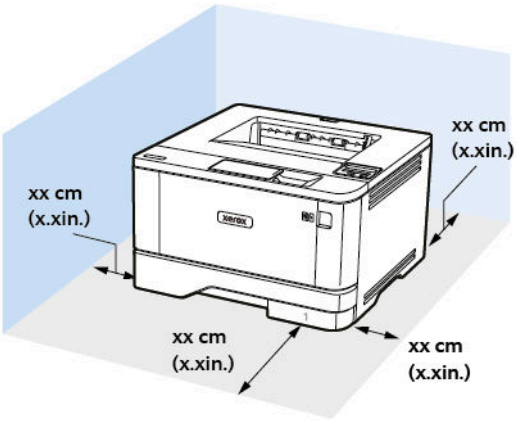

1. Top: 305 mm (12 in.)
2. Rear: 100 mm (3.94 in.)
3. Right side: 76.2 mm (3 in.)
4. Front: 305 mm (12 in.)

   The minimum space needed in front of the printer is 76 mm (3 in.).
5. Left side: 110 mm (4.33 in.)

Attaching cables

CAUTION—SHOCK HAZARD: To avoid the risk of electrical shock, do not set up this product or make any electrical or cabling connections, such as the power cord, fax feature, or telephone, during a lightning storm.

CAUTION—POTENTIAL INJURY: To avoid the risk of fire or electrical shock, connect the power cord to an appropriately rated and properly grounded electrical outlet that is near the product and easily accessible.

CAUTION—POTENTIAL INJURY: To avoid the risk of fire or electrical shock, use only the power cord provided with this product or the manufacturer's authorized replacement.

Warning: To avoid loss of data or printer malfunction, do not touch the USB cable, any wireless network adapter, or the printer in the areas shown while actively printing.

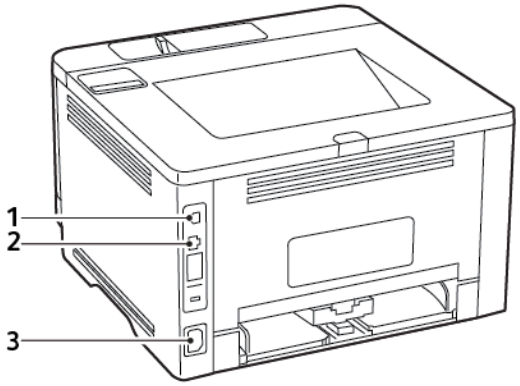

	Printer port	Function
1	USB printer port	Connect the printer to a computer.
2	Ethernet port	Connect the printer to a network.
3	Power cord socket	Connect the printer to an electrical outlet.

Loading paper and specialty media

Setting the Paper Size and Type

1. From the control panel, navigate to:

   Settings > OK > Paper > OK > Tray Configuration > OK > Paper Size/Type > OK, then select a paper source

2. Set the paper size and type.

Configuring Universal paper settings

1. From the control panel, navigate to:

   Settings > OK > **Paper** > OK > **Media Configuration** > OK > **Universal Setup** > OK

2. Configure the settings.

Loading Trays

1. Remove the tray.

   Note: To avoid paper jams, do not remove the tray while the printer is busy.

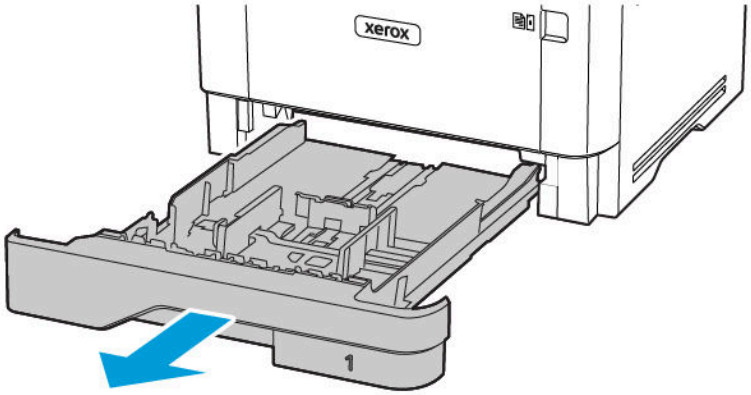

2. Adjust the guides to match the size of the paper that you are loading.

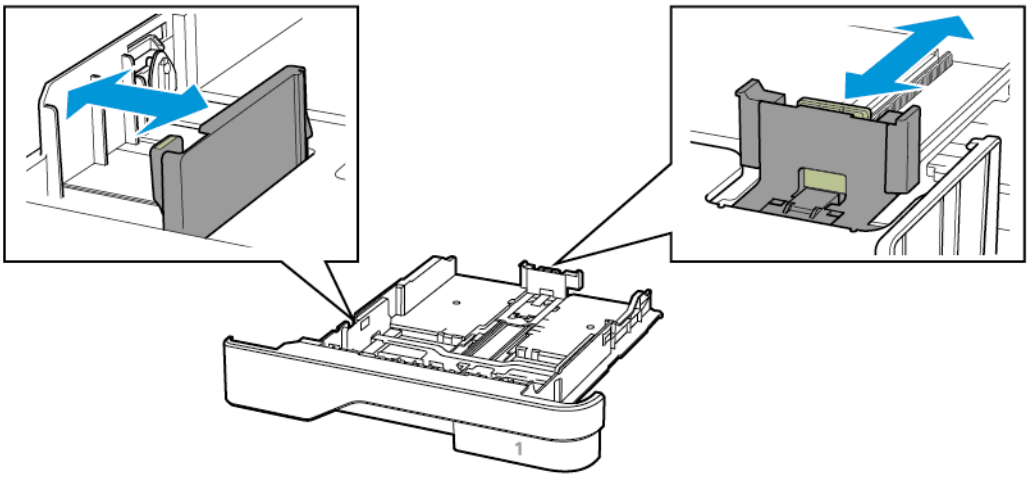

3. Flex, fan, and align the paper edges before loading.

4. Load the paper stack with the printable side facedown, and then make sure that the guides fit snugly against the paper.
   - Load letterhead facedown with the header toward the front of the tray for one-sided printing.
   - Load letterhead faceup with the header toward the back of the tray for two-sided printing.
   - Do not slide paper into the tray.

- To avoid paper jams, make sure that the stack height is below the maximum paper fill indicator.

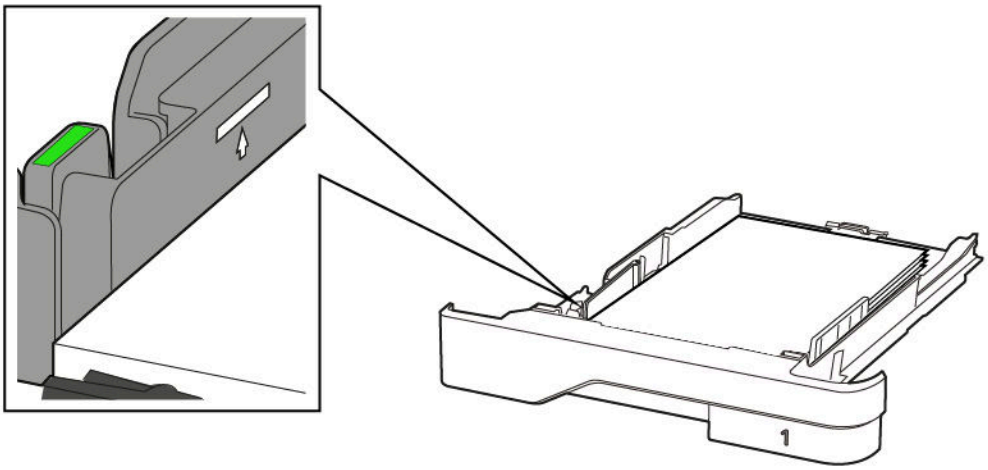

5. Insert the tray.

   If necessary, set the paper size and paper type from the control panel to match the paper loaded.

Loading the Multipurpose Feeder

1. Open the multipurpose feeder.

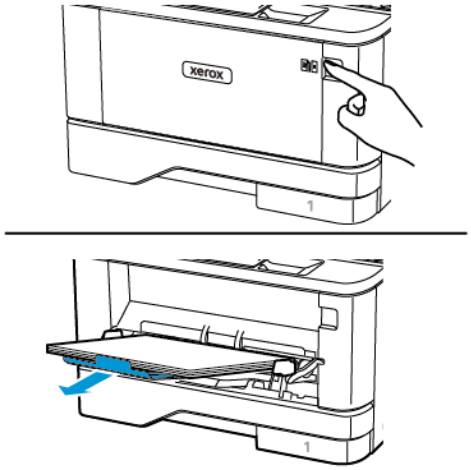

2. Flex, fan, and align the paper edges before loading.

3. Load paper with the printable side faceup.
   - Load letterhead faceup with the header toward the rear of the printer for one-sided printing.
   - Load letterhead facedown with the header toward the front of the printer for two-sided printing.
   - Load envelopes with the flap facedown on the left side.

   Warning—Potential Damage: Do not use envelopes with stamps, clasps, snaps, windows, coated linings, or self-stick adhesives.
4. Adjust the guide to match the size of the paper that you are loading.

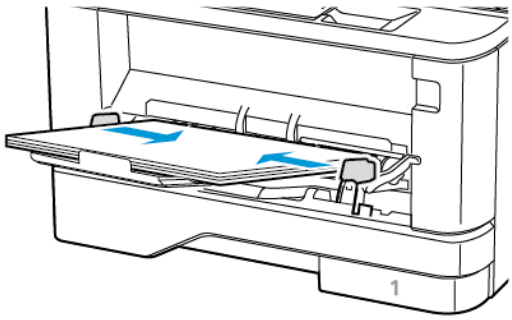

5. From the control panel, set the paper size and paper type to match the paper loaded.

Installing and Updating Software, Drivers, and Firmware

Installing the Software

Before you install the print driver software, verify that the printer is plugged in, powered on, connected correctly, and has a valid IP address. The IP address usually appears in the upper right corner of the control panel.

To view the IP address of the printer, refer to Finding the IP Address of the Printer.

Note: If the *Software and Documentation disc* is not available, download the latest drivers from www.xerox.com/drivers

Operating System Requirements

- Windows 7, Windows 8, Windows 8.1, Windows 10, Windows Server 2008 R2, Windows Server 2012, Windows Server 2016, and Windows Server 2019.
- MacOS version 10.14 and later.
- UNIX and Linux: Your printer supports connection to various UNIX platforms through the network interface.

Installing the Print Drivers for a Windows Network Printer

1. Insert the *Software and Documentation disc* into the appropriate drive on your computer. If the installer does not start automatically, navigate to the drive, then double-click the **Setup.exe** installer file.
2. Click **Xerox Smart Start — Driver Installer (Recommended)**.
3. At the License Agreement, click **Agree**.
4. From the list of discovered printers, select your printer.
   When you install print drivers for a network printer, if your printer does not appear in the list, click **Don't See Your Printer?**, then enter the IP address for your printer.

   To view the IP address of your printer, refer to Finding the IP Address of the Printer.
5. Click **Quick Install**.

   A message appears that confirms that the installation is successful.
6. To complete the installation and close the Installer window, click **Done**.

Installing the Windows Print Driver .zip File

You can download print drivers from Xerox.com in a .zip file, then use the Windows Add Printer Wizard to install the print drivers on your computer.

To install the print driver from the .zip file:

1. Download, then extract the required .zip file to a local directory on your computer.

2. At your computer, open the **Control Panel**, then select **Devices and Printers > Add a Printer**.
3. Click **The printer that I want isn't listed**, then click **Add a local printer or network printer with manual settings**.
4. To use a previously established port, select **Use an existing port**, then from the list, select a Standard TCP/IP Port.
5. To create a Standard TCP/IP port:
   a. Select **Create a New Port**.
   b. For Type of port, select **Standard TCP/IP Port**, then click **Next**.
   c. In the Hostname or IP address field, type the printer IP address or host name.
   d. To disable the feature, clear the check box for **Query the printer and automatically select the driver to use**, then click **Next**.
6. Click **Have Disk**.
7. Click **Browse**. Browse to, then select the driver.inf file for your printer. Click **Open**.
8. Select your printer model, then click **Next**.
9. If a prompt appears because the print driver was installed previously, click **Use the driver that is currently installed (recommended)**.
10. In the Printer name field, type a name for your printer.
11. To install the print driver, click **Next**.
12. If needed, set the printer as the default printer.

    Note: Before you select **Share Printer**, contact your system administrator.

13. To send a test page to the printer, click **Print a test page**.
14. Click **Finish**.

Installing the Print Drivers for a Windows USB Printer

1. Connect the B end of a standard A/B USB 2.0 or USB 3.0 cable to the USB Port on the back of the printer.
2. Connect the A end of the USB cable to the USB port on the computer.
3. If the Windows Found New Hardware Wizard appears, click **cancel**.
4. Insert the *Software and Documentation disc* into the appropriate drive on your computer. If the installer does not start automatically, navigate to the drive, then double-click the **Setup.exe** installer file.
5. Click **Xerox Smart Start — Driver Installer (Recommended)**.
6. At the License Agreement, click **Agree**.
7. From the list of discovered printers, select your printer, then click **Quick Install**.

   A message appears that confirms that the installation is successful.
8. To complete the installation and close the Installer window, click **Done**.

Installing the Printer as a Web Service on Devices

Web Services on Devices (WSD) allows a client to discover and access a remote device and its associated services across a network. WSD supports device discovery, control, and use.

Installing a WSD Printer Using the Add Device Wizard

1. At your computer, click **Start**, then select **Printers and Scanners**.
2. To add the required printer, click **Add a Printer or Scanner**.
3. In the list of available devices, select the device that you want to use, then click **Next**.

   Note: If the printer that you want to use does not appear in the list, click **Cancel**. To add the printer manually, use the IP address of the printer. For details, refer to Installing the Windows Print Driver .zip File.

4. Click **Close**.

Installing the Drivers and Utilities for MacOS

1. Download the latest print driver from https://www.xerox.com/office/drivers.
2. Open the Xerox® Print Drivers 5.xx.x.dmg or .pkg as needed for your printer.
3. To run Xerox® Print Drivers 5.xx.x.dmg or .pkg, double-click the appropriate file name.
4. When prompted, click **Continue**.
5. To accept the license agreement, click **I Agree**.
6. To accept the current installation location, click **Install**, or select another location for the installation files, then click **Install**.
7. If prompted, enter your password, then click **OK**.
8. From the list of discovered printers, select your printer, then click **Next**.
9. If your printer does not appear in the list of discovered printers:
   a. Click the **Network Printer Icon**.
   b. Type the IP address of your printer, then click **Continue**.
   c. Select your printer in the list of discovered printers, then click **Continue**.
10. If your printer was not detected, verify that the printer is powered on and that the Ethernet or USB cable is connected properly.
11. To accept the print queue message, click **OK**.
12. Select or clear the **Set Printer as Default** and **Print a Test Page** check boxes.
13. Click **Continue**, then click **Close**.

Adding the Printer for MacOS

For networking, set up your printer using Bonjour® (mDNS), or for an LPD, LPR connection, connect using the IP address of your printer. For a non-network printer, create a desktop USB connection.

For more information, go to the Online Support Assistant at: https://www.xerox.com/support.

Adding the Printer Using Bonjour

To add the printer using Bonjour®:

1. From the computer Applications folder or from the dock, open **System Preferences**.
2. Click **Printers & Scanners**.

   The list of printers appears on the left of the window.
3. For the list of printers, click the Plus icon (**+**).
4. At the top of the window, click the **Default** icon.
5. Select your printer from the list, then click **Add**.

Note: If your printer is not detected, verify that the printer is powered on and that the Ethernet cable is connected properly.

Adding the Printer by Specifying the IP Address

To add the printer by specifying the IP address:

1. From the computer Applications folder or from the dock, open **System Preferences**.
2. Click **Printers & Scanners**.

   The list of printers appears on the left of the window.
3. In the list of printers, click the Plus (**+**) icon.
4. Click **IP**.
5. From the Protocol list, select the protocol.
6. In the Address field, enter the IP address of the printer.
7. In the Name field, enter a name for the printer.
8. From the Use list, choose **Select a driver to use**.
9. From the printer software list, select the print driver for your printer model.
10. Click **Add**.

Installing Print Drivers and Utilities for UNIX and Linux

For more information on installing print drivers and utilities for UNIX and Linux, refer to https://www.xerox.com/office/drivers.

Updating Firmware

Some applications require a minimum device firmware level to operate correctly.

For more information on updating the device firmware, contact your customer service representative.

1. Open a web browser, and then type the printer IP address in the address field.
   - View the printer IP address on the printer home screen. The IP address appears as four sets of numbers separated by periods, such as 123.123.123.123.
   - If you are using a proxy server, then temporarily disable it to load the web page correctly.

2. Click **Settings > Device > Update Firmware**.
3. Choose one of the following:
   - Click **Check for updates > I agree, start update**.
   - Upload the flash file. To upload the flash file, perform the following steps.
     To get the latest firmware, go to www.xerox.com, and search for your printer model.
     1. Browse to the flash file.

     Note: Make sure that you have extracted the firmware zip file.

     2. Click **Upload > Start**.

Exporting or importing a configuration file

You can export the configuration settings of your printer into a text file, and then import the file to apply the settings to other printers.

1. Open a web browser, and then type the printer IP address in the address field.
   - View the printer IP address on the printer home screen. The IP address appears as four sets of numbers separated by periods, such as 123.123.123.123.
   - If you are using a proxy server, then temporarily disable it to load the web page correctly.
2. From the Embedded Web Server, click **Export Configuration** or **Import Configuration**.
3. Follow the instructions on the screen.
4. If the printer supports applications, then do the following:
   a. Click **Apps** > select the application > **Configure**.
   b. Click **Export** or **Import**.

Networking

Connecting the Printer to a Wi-Fi Network

Note: This feature is available only in some printer models.

Before you begin, make sure that:

- Active Adapter is set to Auto. From the control panel, navigate to **Settings > OK > Network/Ports > OK > Network Overview > OK > Active Adapter > OK > Auto > OK**.
- The Ethernet cable is not connected to the printer.

1. From the control panel, navigate to **Settings > OK > Wireless > OK > Setup On Printer Panel > OK > Choose Network > OK**.
2. Select a Wi-Fi network, and then type the network password.

Note: For Wi-Fi-network-ready printer models, a prompt to set up the Wi-Fi network appears during initial setup.

Connecting the printer to a wireless network using Wi-Fi Protected Setup (WPS)

Note: This feature is available only in some printer models.

Before you begin, make sure that:

- The access point (wireless router) is WPS-certified or WPS-compatible. For more information, see the documentation that came with your access point.
- A wireless network adapter is installed in your printer. For more information, see the instructions that came with the adapter.
- Make sure that Active Adapter is set to Auto. From the control panel, navigate to:

  Settings > OK > **Network/Ports** > OK > **Network Overview** > OK > **Active Adapter** > OK > **Auto** > OK

Configuring Wi-Fi Direct

Note: This feature is available only in some printer models.

Wi-Fi Direct is a Wi-Fi-based peer-to-peer technology that allows wireless devices to connect directly to a Wi-Fi Direct-enabled printer without using an access point (wireless router).

1. From the control panel, navigate to:

   Settings > OK > **Network/Ports** > OK > **Wi-Fi Direct** > OK

2. Configure the settings.
   - **Enable Wi-Fi Direct**—Enables the printer to broadcast its own Wi-Fi Direct network.
   - **Wi-Fi Direct Name**—Assigns a name for the Wi-Fi Direct network.
   - **Wi-Fi Direct Password**—Assigns the password for negotiating the wireless security when using the peer-to-peer connection.
   - **Show Password on Setup Page**—Shows the password on the Network Setup Page.
   - **Auto-Accept Push Button Requests**—Lets the printer accept connection requests automatically.

Note: Accepting push-button requests automatically is not secured.

Connecting a mobile device to the printer

Note: This feature is available only in some printer models.

Before connecting your mobile device, make sure that Wi-Fi Direct has been configured. For more information, see Configuring Wi-Fi Direct.

Connecting Using Wi-Fi Direct

Note: These instructions apply only to Android mobile devices.

1. From the mobile device, go to the settings menu.
2. Enable **Wi-Fi**, and then tap **Wi-Fi Direct**.
3. Select the printer Wi-Fi Direct name.
4. Confirm the connection on the printer control panel.

Connecting Using Wi-Fi

1. From the mobile device, go to the settings menu.
2. Tap **Wi-Fi**, and then select the printer Wi-Fi Direct name.

   Note: The string DIRECT-xy (where x and y are two random characters) is added before the Wi-Fi Direct name.

3. Enter the Wi-Fi Direct password.

Connecting a computer to the printer

Note: This feature is available only in some printer models.

Before connecting your computer, make sure that Wi-Fi Direct has been configured. For more information, see Configuring Wi-Fi Direct.

For Windows users

1. Open **Printers & scanners**, and then click **Add a printer or scanner**.
2. Click **Show Wi-Fi Direct printers**, and then select the printer Wi-Fi Direct name.
3. From the printer display, take note of the eight-digit PIN of the printer.
4. Enter the PIN on the computer.

Note: If the print driver is not already installed, then Windows downloads the appropriate driver.

For Macintosh users

1. Click the wireless icon, and then select the printer Wi-Fi Direct name.

Note: The string DIRECT-xy (where x and y are two random characters) is added before the Wi-Fi Direct name.

2. Type the Wi-Fi Direct password.

Note: Switch your computer back to its previous network after disconnecting from the Wi-Fi Direct network.

Deactivating the Wi-Fi network

Note: This feature is available only in some printer models.

1. From the printer control panel, navigate to:

   Settings > OK > **Network/Ports** > OK > **Network Overview** > OK > **Active Adapter** > OK > **Standard Network** > OK

2. Follow the instructions on the display.

Checking the printer connectivity

1. From the control panel, navigate to:

   Settings > OK > **Reports** > OK > **Network** > OK > **Network Setup Page** > OK

2. Check the first section of the page and confirm that the status is connected.

   If the status is not connected, then the LAN drop may be inactive, or the network cable may be unplugged or malfunctioning. Contact your administrator for assistance.

Printing the Menu Settings Page

1. From the control panel, navigate to:

   Settings > OK > **Reports** > OK

2. Select **Menu Settings Page**, and then press OK.

4

Secure the Printer

This chapter contains:

- Locating the Security Slot 44
- Erasing printer memory 45
- Restoring factory default settings 46
- Statement of Volatility 47

Locating the Security Slot

The printer is equipped with a security lock feature. Attach a security lock compatible with most laptop computers in the location shown to secure the printer in place.

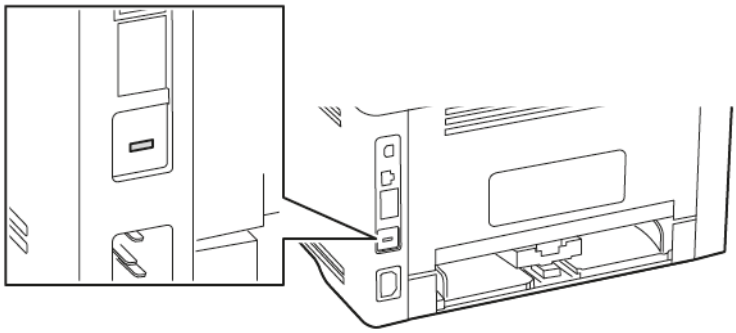

Erasing printer memory

To erase volatile memory or buffered data, turn off the printer.

To erase non-volatile memory or individual settings, device and network settings, security settings, and embedded solutions, do the following:

1. From the control panel, navigate to:

   Settings > OK > **Device** > OK > **Maintenance** > OK > **Out of Service Erase** > OK > **Sanitize all information on nonvolatile memory** > OK > **Yes** > OK

2. Select either **Start initial setup** or **Leave printer offline**, and then press OK.

Restoring factory default settings

1. From the control panel, navigate to:

   Settings > OK > **Device** > OK > **Restore Factory Defaults** > OK > **Restore all settings** > OK

2. Select **Yes**, and then press OK.

Statement of Volatility

Your printer contains various types of memory that can store device and network settings, and user data.

Type of memory	Description
Volatile memory	Your printer uses standard *random access memory* (RAM) to temporarily buffer user data during simple print jobs.
Non-volatile memory	Your printer may use two forms of non-volatile memory: EEPROM and NAND (flash memory). Both types are used to store operating system, device settings, and network information.

Erase the content of any installed printer memory in the following circumstances:

- The printer is being decommissioned.
- The printer is being moved to a different department or location.
- The printer is being serviced by someone from outside your organization.
- The printer is being removed from your premises for service.
- The printer is being sold to another organization.

5

Print

This chapter contains:

- Printing from a Computer 50
- Printing from a Mobile Device 51
- Printing a font sample list 53
- Placing separator sheets between copies 54
- Canceling a print job 55
- Adjusting toner darkness 56

Printing from a Computer

Note: For labels, card stock, and envelopes, set the paper size and type in the printer before printing the document.

1. From the document that you are trying to print, open the Print dialog.
2. If necessary, adjust the settings.
3. Print the document.

Printing from a Mobile Device

Printing from a Mobile Device using Mopria™ Print Service

Note: This feature is available only in some printer models.

Mopria Print Service is a mobile printing solution for mobile devices running on Android™ version 5.0 or later. It allows you to print directly to any Mopria-certified printer.

Note: Make sure that you download the Mopria Print Service application from the Google Play™ store and enable it in the mobile device.

1. From your Android mobile device, launch a compatible application or select a document from your file manager.
2. Tap ⋮ > **Print**.
3. Select a printer, and then adjust the settings, if necessary.
4. Tap 🖶.

Printing from a Mobile Device Using AirPrint®

The AirPrint software feature is a mobile printing solution that allows you to print directly from Apple devices to an AirPrint-certified printer.

- Make sure that the Apple device and the printer are connected to the same network. If the network has multiple wireless hubs, then make sure that both devices are connected to the same subnet.
- This application is supported only in some Apple devices.

1. From your mobile device, select a document from your file manager or launch a compatible application.
2. Tap the **Share > Print**.
3. Select a printer, and then adjust the settings, if necessary.
4. Print the document.

Printing from a Mobile Device using Wi-Fi Direct®

Note: This feature is available only in some printer models.

Wi-Fi Direct is a printing service that lets you print to any Wi-Fi Direct-ready printer.

Note: Make sure that the mobile device is connected to the printer wireless network. For more information, see Connecting a mobile device to the printer.

1. From your mobile device, launch a compatible application or select a document from your file manager.

2. Depending on your mobile device, do one of the following:
   - Tap ⋮ > **Print**.
   - Tap ⬆ > **Print**.
   - Tap ··· > **Print**.
3. Select a printer, and then adjust the settings, if necessary.
4. Print the document.

Printing a font sample list

1. From the control panel, navigate to:

   Settings > OK > **Reports** > OK > **Print** > OK > **Print Fonts** > OK

2. Select a font sample, and then press OK.

Placing separator sheets between copies

1. From the control panel, navigate to:

   Settings > OK > **Print** > OK > **Layout** > OK > **Separator Sheets** > OK > **Between Copies** > OK

2. Print the document.

Canceling a print job

From the printer control panel

1. From the control panel, press twice, and then press .
2. Select a print job to cancel, and then press OK.

From the computer

1. Depending on the operating system, do either of the following:
   - Open the printers folder, and then select your printer.
   - From the System Preferences in the Apple menu, navigate to your printer.
2. Select a print job to cancel.

Adjusting toner darkness

1. From the control panel, navigate to:

   Settings > OK > **Print** > OK > **Quality** > OK > **Toner Darkness** > OK

2. Adjust the setting, and then press OK.

6

Use Printer Menus

This chapter contains:

- Menu map 58
- Device 59
- Print 67
- Paper 73
- Network/Ports 76
- Security 90
- Reports 94
- Troubleshooting 96

Menu map

Device	• Preferences • Eco-Mode • Notifications • Power Management	• Restore Factory Defaults • Maintenance • About this Printer
Print	• Layout • Setup • Quality	• PostScript • PCL • Image
Paper	• Tray Configuration	• Media Configuration
Network/Ports	• Network Overview • Wireless • Wi-Fi Direct • Ethernet • TCP/IP • SNMP	• IPSec • 802.1x • LPD ConfigurationHTTP/FTP Settings • USB • Restrict external network access
Security*	• Login Methods • Certificate Management • Login Restrictions	• Erase Temporary Data Files • Miscellaneous
Reports	• Menu Settings Page • Device	• Print • Network
Troubleshooting	Print Quality Test Pages	
* Can be configured only from the Embedded Web Server.		

Device

Preferences

Menu item	Description
Display Language	Set the language of the text that appears on the display.
Country/Region	Identify the country or region that the printer is configured to operate.
Run Initial Setup • Yes • No*	Run the setup wizard.
Displayed information • Display Text 1 • Display Text 2	Specify the information to appear on the home screen.
Date and Time • Configure – Current Date and Time – Manually Set Date and Time – Date Format [MM-DD-YYYY*] – Time Format [12 hour A.M./P.M.*] – Time Zone [USA/Canada EST*] • Network Time Protocol – Enable NTP – NTP Server	Configure the printer date and time.
Paper Sizes • U.S.* • Metric	Specify the unit of measurement for paper sizes. The country or region selected in the initial setup wizard determines the initial paper size setting.
Screen Timeout 5–300 (60*)	Set the idle time in seconds before the display shows the home screen, or before the printer logs out a user account automatically.
* An asterisk next to a value indicates the factory default setting.	

Eco-Mode

Menu item	Description
Print Sides 1-Sided* 2-Sided	Specify whether to print on one side or two sides of the paper.
Print Pages per Side Off* 2 pages per side 3 pages per side 4 pages per side 6 pages per side 9 pages per side 12 pages per side 16 pages per side	Print multiple page images on one side of a sheet of paper.
Print Toner Darkness Light Normal* Dark	Determine the lightness or darkness of text images.
* An asterisk next to a value indicates the factory default setting.	

Notifications

Menu item	Description
Supplies Show Supply Estimates Show estimates* Do not show estimates	Show the estimated status of the supplies.
Supplies Custom Supply Notifications	Configure notification settings when the printer requires user intervention. This menu item appears only in the Embedded Web Server.

Menu item	Description
E-mail Alerts Setup E-mail Setup Primary SMTP Gateway Primary SMTP Gateway Port (25*) Secondary SMTP Gateway Secondary SMTP Gateway Port (25*) SMTP Timeout (30 seconds*) Reply Address Always use SMTP default Reply Address (Off*) Use SSL/TLS (Disabled*) Require Trusted Certificate (On*) SMTP Server Authentication (No authentication required*) Device-Initiated E-mail (None*) Device Userid Device Password NTLM Domain	Configure the e-mail settings of the printer. This menu item appears only in the Embedded Web Server.
Error Prevention Jam Assist Off On*	Set the printer to check for jammed paper automatically.
Error Prevention Auto Continue Disabled 5–255 (5*)	Let the printer continue processing or printing a job automatically after clearing certain attendance conditions.
Error Prevention Auto Reboot Auto Reboot (Reboot always*)	Set the printer to restart when an error occurs.
Error Prevention Auto Reboot Max Auto Reboots (2*)	Set the number of automatic reboots that the printer can perform.
Error Prevention Auto Reboot Auto Reboot Window (720*)	Set the number of seconds before the printer performs an automatic reboot.

Menu item	Description
Error Prevention Auto Reboot Auto Reboot Counter	Show a read-only information of the reboot counter.
Error Prevention Display Short Paper Error Auto-clear* On	Set the printer to show a message when a short paper error occurs. Short paper refers to the size of the paper loaded.
Error Prevention Page Protect Off* On	Set the printer to process the entire page into the memory before printing it.
Jam Content Recovery Jam Recovery Auto* Off On	Set the printer to reprint jammed pages.
* An asterisk next to a value indicates the factory default setting.	

Power Management

Menu item	Description
Sleep Mode Profile Print from Sleep Mode Stay awake after printing Enter Sleep Mode after printing*	Set the printer to stay in Ready mode or return to Sleep mode after printing.
Timeouts Sleep Mode 1–120 minutes (15*)	Set the idle time before the printer begins operating in Sleep mode.
Timeouts Hibernate Timeout Disabled 1 hour 2 hours	Set the time before the printer turns off.

Menu item	Description
3 hours 6 hours 1 day 2 days 3 days* 1 week 2 weeks 1 month	
Timeouts Hibernate Timeout on Connection Hibernate Do Not Hibernate*	Set Hibernate Timeout to turn off the printer while an active Ethernet connection exists.
* An asterisk next to a value indicates the factory default setting.	

Restore Factory Defaults

Menu item	Description
Restore Settings Restore all settings Restore printer settings Restore network settings	Restore the printer factory default settings.

Maintenance

Config Menu

Menu item	Description
USB Configuration USB PnP • 1* • 2	Change the USB driver mode of the printer to improve its compatibility with a personal computer.
USB Configuration USB Speed • Full	Set the USB port to run at full speed and disable its high-speed capabilities.

Menu item	Description
• Auto*	
Tray Configuration Tray Linking • Automatic* • Off	Set the printer to link the trays that have the same paper type and paper size settings.
Tray Configuration Show Tray Insert Message • Off • Only for unknown sizes* • Always	Display a message to select paper size and type after inserting the tray.
Tray Configuration A5 Loading • Short Edge • Long Edge*	Specify the page orientation when loading A5 paper size.
Tray Configuration Paper Prompts • Auto* • MP Feeder • Manual Paper	Set the paper source that the user fills when a prompt to load paper appears.
Tray Configuration Envelope Prompts • Auto* • MP Feeder • Manual Envelope	Set the paper source that the user fills when a prompt to load envelope appears.
Tray Configuration Action for Prompts • Prompt user* • Continue • Use current	Set the printer to resolve paper- or envelope-related change prompts.
Reports Menu Settings Page • Event Log • Event Log Summary	Print reports about printer menu settings, status, and event logs.
Printer Emulations PS Emulation • Off • On*	Set the printer to recognize and use the PS data stream.
Printer Emulations Emulator Security	Set the page timeout during emulation.

Menu item	Description
• Page Timeout (60*)	
Printer Emulations Emulator Security • Reset Emulator After Job (Off*)	Reset the emulator after a print job.
Printer Emulations Emulator Security • Disable Printer Message Access (On*)	Disable access to the printer message during emulation.
Print Configuration Font Sharpening • 0–150 (24*)	Set a text point-size value below which the high-frequency screens are used when printing font data.
Print Configuration Print Density • Disabled • 1–5 (3*)	Adjust the toner density when printing documents.
Device Operations Quiet Mode • Off* • On	Set the printer to reduce the amount of noise that it makes when printing. Enabling this setting slows down the overall performance of the printer.
Device Operations Panel Menus • Enable* • Disable	Set the printer to reduce the amount of noise that it makes when printing.
Device Operations Clear Custom Status	Erase all custom messages.
* An asterisk next to a value indicates the factory default setting.	

Out of Service Erase

Menu item	Description
Erase Printer Memory Printer Memory Last Sanitized Sanitize all information on nonvolatile memory Erase all printer and network settings	Clear all settings and applications that are stored in the printer.

About this Printer

Menu item	Description
Xerox Asset Tag	The maximum length is 32 characters.
Customer Asset Tag	The maximum length is 32 characters.
Printer Location	Identify the printer location. The maximum length is 63 characters.
Contact	Personalize the printer name. The maximum length is 63 characters.

Print

Layout

Menu item	Description
Sides 1-Sided* 2-Sided	Specify whether to print on one side or two sides of the paper.
Flip Style Long Edge* Short Edge	Determine which side of the paper is bound when performing two-sided printing. Depending on the option selected, the printer automatically offsets each printed information of the page to bind the job correctly.
Blank Pages Print Do Not Print*	Print blank pages that are included in a print job.
Collate Off [1,1,1,2,2,2]* On [1,2,1,2,1,2]	Keep the pages of a print job stacked in sequence, particularly when printing multiple copies of the job.
Separator Sheets None* Between Copies Between Jobs Between Pages	Insert blank separator sheets when printing.
Separator Sheet Source Tray [x] (1*) Multipurpose Feeder	Specify the paper source for the separator sheet.
Pages per Side Off* 2 pages per side 3 pages per side 4 pages per side 6 pages per side 9 pages per side 12 pages per side	Print multiple page images on one side of a sheet of paper.

Menu item	Description
16 pages per side	
Pages per Side Ordering Horizontal* Reverse Horizontal Vertical Reverse Vertical	Specify the positioning of multiple page images when using Pages per Side. The positioning depends on the number of page images and their page orientation.
Pages per Side Orientation Auto* Landscape Portrait	Specify the orientation of a multiple-page document when using Pages per Side.
Pages per Side Border None* Solid	Print a border around each page image when using Pages per Side.
Copies 1–9999 (1*)	Specify the number of copies for each print job.
Print Area Normal* Whole Page	Set the printable area on a sheet of paper.
* An asterisk next to a value indicates the factory default setting.	

Setup

Menu item	Description
Printer Language PCL Emulation* PS Emulation	Set the printer language. Setting a printer language default does not prevent a software program from sending print jobs that use another printer language.
Resource Save Off* On	Determine what the printer does with downloaded resources, such as fonts and macros, when it receives a job that requires more than the available memory. • When set to Off, the printer retains downloaded resources only until memory is needed. Resources associated with the inactive printer language are deleted.

Menu item	Description
	• When set to On, the printer preserves all the permanent downloaded resources across all language switches. When necessary, the printer shows memory full messages instead of deleting permanent resources.
Print All Order Alphabetical* Newest First Oldest First	Specify the order when you choose to print all held and confidential jobs.
* An asterisk next to a value indicates the factory default setting.	

Quality

Menu item	Description
Print Resolution 300 dpi 600 dpi* 1200 Image Q 2400 Image Q	Set the resolution for the text and images on the printed output. Resolution is determined in dots per inch or image quality.
Toner Darkness Light Normal* Dark	Determine the lightness or darkness of text images.
Halftone Normal* Detail	Enhance the printed output to have smoother lines with sharper edges.
* An asterisk next to a value indicates the factory default setting.	

PostScript

Menu item	Description
Print PS Error Off* On	Print a page that describes the PostScript® error. When an error occurs, processing of the job stops, the printer prints an error message, and the rest of the print job is flushed.
Minimum Line Width 1–30 (2*)	Set the minimum stroke width. Jobs printed in 1200 dpi use the value directly.
Lock PS Startup Mode Off On*	Disable the SysStart file.
Wait Timeout 15–65535 (40 seconds*) Disabled	Set the printer to wait for more data before canceling a print job.
* An asterisk next to a value indicates the factory default setting.	

PCL

Menu item	Description
Font Name [List of available fonts] (Courier*)	Select a font from the specified font source.
Symbol Set [List of available symbol set] (10U PC-8*)	Specify the symbol set for each font name. A symbol set is a set of alphabetic and numeric characters, punctuation, and special symbols. Symbol sets support the different languages or specific programs such as math symbols for scientific text.
Pitch 0.08–100.00 (10.00*)	Specify the pitch for fixed or monospaced fonts. Pitch refers to the number of fixed-space characters in a horizontal inch of type.
Orientation Portrait* Landscape	Specify the orientation of text and graphics on the page.
Lines per Page 1–255	Specify the number of lines of text for each page printed through the PCL® data stream.

Menu item	Description
	• This menu item activates vertical escapement that causesthe selected number of requested lines to print between the default margins of the page. • 60 is the U.S. factory default setting. 64 is the international factory default setting.
PCL5 Minimum Line Width 1–30 (2*)	Set the initial minimum stroke width. Jobs printed in 1200 dpi use the value directly.
PCLXL Minimum Line Width 1–30 (2*)	
A4 Width 198mm* 203mm	Set the width of the logical page on A4-size paper. Logical page is the space on the physical page where data is printed.
Auto CR after LF Off* On	Set the printer to perform a carriage return after a line feed control command. Carriage return is a mechanism that commands the printer to move the position of the cursor to the first position on the same line.
Auto LF after CR Off* On	Set the printer to perform a line feed after a carriage return control command.
Tray Renumber Assign MP Feeder Assign Tray [x] Assign Manual Paper Assign Manual Envelope	Configure the printer to work with a different print driver or custom application that uses a different set of source assignments to request a given paper source. Choose from the following options: Off*—The printer uses the factory default paper source assignments. None—The paper source ignores the Select Paper Feed command. 0–199—Select a numeric value to assign a custom value to a paper source.
Tray Renumber View Factory Defaults	Show the factory default value assigned for each paper source.
Tray Renumber Restore Defaults	Restore the tray renumber values to their factory defaults.

Menu item	Description
Print Timeout 1–255 (90 seconds*) Disabled	Set the printer to end a print job after it has been idle for the specified amount of time in seconds.
* An asterisk next to a value indicates the factory default setting.	

Image

Menu item	Description
Auto Fit On Off*	Select the best available paper size and orientation setting for an image. When set to On, this menu item overrides the scaling and orientation settings for the image.
Invert Off* On	Invert bitonal monochrome images. This menu item does not apply to GIF or JPEG image formats.
Scaling Anchor Top Left Best Fit* Anchor Center Fit Height/Width Fit Height Fit Width	Adjust the image to fit the printable area. When Auto Fit is set to On, Scaling is automatically set to Best Fit.
Orientation Portrait* Landscape Reverse Portrait Reverse Landscape	Specify the orientation of text and graphics on the page.
* An asterisk next to a value indicates the factory default setting.	

Paper

Tray Configuration

Menu item	Description
Default Source Tray [x] (1*) MP Feeder Manual Paper Manual Envelope	Set the paper source for all print jobs. MP Feeder appears only when Configure MP is set to Cassette.
Paper Size/Type Tray [x] MP Feeder Manual Paper Manual Envelope	Specify the paper size or paper type loaded in each paper source.
Substitute Size Off Letter/A4 All Listed*	Set the printer to substitute a specified paper size if the requested size is not loaded in any paper source. • Off prompts the user to load the required paper size. • Letter/A4 prints A4-size document on letter when loading letter, and letter-size jobs on A4 paper size when loading A4. • All Listed substitutes Letter/A4.
Configure MP Cassette* Manual First	Set the printer when to pick paper loaded in the multipurpose feeder. • When set to Cassette, the printer treats the multipurpose feeder like a tray. • When set to Manual, the printer treats the multipurpose feeder like a manual feeder. • When set to First, the printer picks paper from the multipurpose feeder until it is empty, regardless of the required paper source or paper size.
* An asterisk next to a value indicates the factory default setting.	

Media Configuration

Universal Setup

Menu item	Description
Units of Measure Inches Millimeters	Specify the unit of measurement for the universal paper. Inches is the U.S. factory default setting. Millimeters is the international factory default setting.
Portrait Width 3.90–14.17 inches (8.50*) 99–360 mm (216*)	Set the portrait width of the universal paper.
Portrait Height 3.90–14.17 inches (14*) 99–360 mm (356*)	Set the portrait height of the universal paper.
Feed Direction Short Edge* Long Edge	Set the printer to pick paper from the short edge or long edge direction. Long Edge appears only when the longest edge is shorter than the maximum width supported.
* An asterisk next to a value indicates the factory default setting.	

Media Types

Menu item	Description
Plain Paper Card Stock Recycled Labels Bond Envelope Rough Envelope Letterhead Preprinted Colored Paper Light Heavy Rough/Cotton Custom Type [X]	Specify the texture, weight, and orientation of the paper loaded.

Network/Ports

Network Overview

Menu item	Description
Active Adapter Auto* Standard Network Wireless	Specify the type of the network connection.
Network Status	Show the connectivity status of the printer network.
Display Network Status on Printer Off On*	Show the network status on the display.
Speed, Duplex	Show the speed of the currently active network card.
IPv4	Show the IPv4 address.
All IPv6 Addresses	Show all IPv6 addresses.
Reset Print Server Start	Reset all active network connections to the printer. This setting removes all network configuration settings.
Network Job Timeout Off On* (90 seconds)	Set the time before the printer cancels a network print job.
Banner Page Off* On	Print a banner page.
Enable Network Connections Enable* Disable	Enable or disable all network connections.
Enable LLDP Off* On	Enable Link Layer Discovery Protocol (LLDP) in the printer.
* An asterisk next to a value indicates the factory default setting.	

Wireless

Menu item	Description
Setup On Printer Panel Choose Network Add Wi-Fi Network • Network Name • Network Mode • Wireless Security Mode (Disabled*)	Determine the wireless network that the printer connects to. This menu item appears as *Wireless Connection Setup* in the Embedded Web Server.
Wi-Fi Protected Setup Start Push Button Method Start PIN Method	Establish a wireless network and enable network security. • Start Push Button Method connects the printer to a wireless network when buttons on both the printer and the access point (wireless router) are pressed within a given time. • Start PIN Method connects the printer to a wireless network when a PIN on the printer is entered into the wireless settings of the access point.
Compatibility 802.11b/g/n (2.4GHz)*	Specify the wireless standard for the wireless network.
Wireless Security Mode Disabled* WEP WPA2/WPA-Personal WPA2-Personal 802.1x - RADIUS	Set the type of security for connecting the printer to wireless devices.
WEP Authentication Mode Auto* Open Shared	Set the type of Wireless Encryption Protocol (WEP) used by the printer. This menu item appears only if Wireless Security Mode is set to WEP.
Set WEP Key	Specify a WEP password for secure wireless connection. This menu item appears only if Wireless Security Mode is set to WEP.
WPA2-Personal AES*	Enable wireless security through WPA2. This menu item appears only if Wireless Security Mode is set to WPA2-Personal.

Menu item	Description
Set PSK	Set the password for secure wireless connection. This menu item appears only if Wireless Security Mode is set to WPA2/WPA-Personal or WPA2-Personal.
WPA2/WPA-Personal AES*	Enable wireless security through WPA2/WPA. This menu item appears only if Wireless Security Mode is set to WPA2/WPA-Personal.
802.1x Encryption Mode WPA+ WPA2*	Enable wireless security through 802.1x standard. This menu item appears only if Wireless Security Mode is set to 802.1x - Radius.
IPv4 Enable DHCP On* Off	Enable Dynamic Host Configuration Protocol (DHCP). DHCP is a standard protocol that lets a server dynamically assign an IP address and other network configuration parameters to each device on the network, so that they can communicate with other IP networks.
IPv4 Set Static IP Address IP Address Netmask Gateway	Set the static IP address of your printer.
IPv6 Enable IPv6 On* Off	Enable IPv6 in the printer.
IPv6 Enable DHCPv6 Off* On	Enable DHCPv6 in the printer.
IPv6 Stateless Address Autoconfiguration Off On*	Set the network adapter to accept the automatic IPv6 address configuration entries provided by a router.
IPv6 DNS Address	Specify the DNS server address.

Menu item	Description
IPv6 Manually Assigned IPV6	Assign the IPv6 address. This menu item appears only in some printer models.
IPv6 Manually Assigned IPV6 Router	Assign the IPv6 router address. This menu item appears only in some printer models.
IPv6 Address Prefix 0–128 (64*)	Specify the address prefix.
IPv6 All IPv6 Addresses	Show all IPv6 addresses.
IPv6 All IPv6 Router Addresses	Show all IPv6 router addresses.
Network Address UAA LAA	View the network addresses.
PCL SmartSwitch On* Off	Set the printer to switch automatically to PCL emulation when a print job requires it, regardless of the default printer language. If PCL SmartSwitch is off, then the printer does not examine incoming data and uses the default printer language specified in the Setup menu.
PS SmartSwitch On* Off*	Set the printer to switch automatically to PS emulation when a print job requires it, regardless of the default printer language. • This menu item appears only in some printer models. • If PS SmartSwitch is off, then the printer does not examine incoming data and uses the default printer language specified in the Setup menu.
Mac Binary PS Auto* On Off	Set the printer to process Macintosh binary PostScript print jobs. • This menu item appears only in some printer models. • On processes raw binary PostScript print jobs. • Off filters print jobs using the standard protocol.
* An asterisk next to a value indicates the factory default setting.	

Wi-Fi Direct

Menu item	Description
Enable Wi-Fi Direct On Off*	Set the printer to connect directly to Wi-Fi devices.
Wi-Fi Direct Name	Specify the name of the Wi-Fi Direct network.
Wi-Fi Direct Password	Set the password to authenticate and validate users on a Wi-Fi connection.
Show Password on Setup Page Off On*	Show the Wi-Fi Direct Password on the Network Setup Page.
Preferred Channel Number 1–11 Auto*	Set the preferred channel of the Wi-Fi network.
Group Owner IP Address	Specify the IP address of the group owner.
Auto-Accept Push Button Requests Off* On	Accept requests to connect to the network automatically. Accepting clients automatically is not secured.
* An asterisk next to a value indicates the factory default setting.	

Ethernet

Menu item	Description
Network Speed	Show the speed of an active network adapter.
IPv4 Enable DHCP On* Off	Enable Dynamic Host Configuration Protocol (DHCP). DHCP is a standard protocol that allows a server to distribute IP addressing and configuration information to clients in a dynamic manner.
IPv4 Set Static IP Address IP Address Netmask	Set the static IP address of your printer.

Menu item	Description
Gateway	
IPv6 Enable IPv6 On* Off	Enable IPv6 in the printer.
IPv6 Enable DHCPv6 Off* On	Enable DHCPv6 in the printer.
IPv6 Stateless Address Autoconfiguration On* Off	Set the network adapter to accept the automatic IPv6 address configuration entries provided by a router.
IPv6 DNS Address	Specify the DNS server address.
IPv6 Address Prefix 0–128 (64*)	Specify the address prefix.
IPv6 All IPv6 Addresses	Show all IPv6 addresses.
IPv6 All IPv6 Router Addresses	Show all IPv6 router addresses.
Network Address UAA LAA	Show the printer Media Access Control (MAC) addresses: Locally Administered Address (LAA) and Universally Administered Address (UAA). You can change the printer LAA manually.
PCL SmartSwitch On* Off	Set the printer to switch automatically to PCL emulation when a print job requires it, regardless of the default printer language. If PCL SmartSwitch is off, then the printer does not examine incoming data and uses the default printer language specified in the Setup menu.
PS SmartSwitch On*	Set the printer to switch automatically to PS emulation when a print job requires it, regardless of the default printer language.

Menu item	Description
Off	If PS SmartSwitch is off, then the printer does not examine incoming data and uses the default printer language specified in the Setup menu.
Mac Binary PS Auto* On Off	Set the printer to process Macintosh binary PostScript print jobs. • On processes raw binary PostScript print jobs. • Off filters print jobs using the standard protocol.
Energy Efficient Ethernet Auto* On Off	Reduce power consumption when the printer does not receive data from the Ethernet network.
* An asterisk next to a value indicates the factory default setting.	

TCP/IP

Note: This menu appears only in network printers or printers that are attached to print servers.

Menu item	Description
Set Hostname	Set the current TCP/IP host name.
Allow DHCP/BOOTP to update NTP server On* Off	Allow the DHCP and BOOTP clients to update the NTP settings of the printer.
Enable Auto IP On* Off	Assign an IP address automatically.
DNS Address	Specify the current Domain Name System (DNS) server address.
Backup DNS	Specify the backup DNS server addresses.
Backup DNS 2	
Backup DNS 3	
Enable DDNS Off* On	Update the Dynamic DNS settings.

Menu item	Description
DDNS TTL	Specify the current DDNS settings.
Default TTL	
DDNS Refresh Time	
Enable mDNS On* Off	Update multicast DNS settings.
WINS Address	Specify a server address for Windows Internet Name Service (WINS).
Enable BOOTP On Off*	Allow the BOOTP to assign a printer IP address.
MTU	Specify a maximum transmission unit (MTU) parameter for the TCP connections.
Raw Print Port 1–65535 (9100*)	Specify a raw port number for printers connected on a network.
Outbound Traffic Maximum Speed On Off*	Enable the printer maximum transfer rate.
Enable TLSv1.0 On* Off	Enable the TLSv1.0 protocol.
Enable TLSv1.1 On* Off	Enable the TLSv1.1 protocol.
SSL Cipher List	Specify the cipher algorithms to use for the SSL or the TLS connections.
* An asterisk next to a value indicates the factory default setting.	

SNMP

Note: This menu appears only in network printers or printers that are attached to print servers.

Menu item	Description
SNMP Versions 1 and 2c Enabled Off On* Allow SNMP Set Off On* Enable PPM MIB Off On* SNMP Community	Configure Simple Network Management Protocol (SNMP) versions 1 and 2c to install print drivers and applications.
SNMP Version 3 Enabled Off On* Context Name Set Read/Write Credentials User Name Authentication Password Privacy Password Set Read-only Credentials User Name Authentication Password Privacy Password Authentication Hash MD5 SHA1* Minimum Authentication Level No Authentication, No Privacy Authentication, No Privacy Authentication, Privacy* Privacy Algorithm DES AES-128*	Configure SNMP version 3 to install and update the printer security.

Menu item	Description
* An asterisk next to a value indicates the factory default setting.	

IPSec

Note: This menu appears only in network printers or printers that are attached to print servers.

Menu item	Description
Enable IPSec Off* On	Enable Internet Protocol Security (IPSec).
Base Configuration Default* Compatibility Secure	Set the IPSec base configuration. This menu item appears only when Enable IPSec is set to On.
DH (Diffie-Hellman) Group Proposal modp2048 (14)* modp3072 (15) modp4069 (16) modp6144 (17)	Set the IPSec encryption. • DH (Diffie-Hellman) Group Proposal appears only when Base Configuration is set to Compatibility. • IKE SA Lifetime (Hours) and IPSec SA Lifetime (Hours) appear only when Base Configuration is set to Secure.
IKE SA Lifetime (Hours) 1 2 4 8 24*	
IPSec SA Lifetime (Hours) 1 2 4 8* 24	
Proposed Encryption Method 3DES AES*	Specify the encryption and authentication methods to connect to a network securely.

Menu item	Description
Proposed Authentication Method SHA1 SHA256* SHA512	These menu items appear only when Base Configuration is set to Compatibility.
IPSec Device Certificate	Specify an IPSec certificate. This menu item appears only when Enable IPSec is set to On.
Pre-Shared Key Authenticated Connections Host [x] Address Key	Configure the authenticated connections of the printer. These menu items appear only when Enable IPSec is set to On.
Certificate Authenticated Connections Host [x] Address[/subnet] Address[/subnet]	
* An asterisk next to a value indicates the factory default setting.	

802.1x

Note: This menu appears only in network printers or printers that are attached to print servers.

Menu item	Description
Active Off* On	Let the printer join networks that require authentication before allowing access.
* An asterisk next to a value indicates the factory default setting.	

LPD Configuration

Note: This menu appears only in network printers or printers that are attached to print servers.

Menu item	Description
LPD Timeout 0–65535 seconds (90*)	Set the time-out value to stop the Line Printer Daemon (LPD) server from waiting indefinitely for hung or invalid print jobs.
LPD Banner Page Off* On	Print a banner page for all LPD print jobs. A banner page is the first page of a print job used as a separator of print jobs and to identify the originator of the print job request.
LPD Trailer Page Off* On	Print a trailer page for all LPD print jobs. A trailer page is the last page of a print job.
LPD Carriage Return Conversion Off* On	Enable carriage return conversion. Carriage return is a mechanism that commands the printer to move the position of the cursor to the first position on the same line.
* An asterisk next to a value indicates the factory default setting.	

HTTP/FTP Settings

Menu item	Description
Enable HTTP Server Off On*	Access the Embedded Web Server to monitor and manage the printer.
Enable HTTPS Off On*	Configure the Hypertext Transfer Protocol Secure (HTTPS) settings.
Force HTTPS Connections On Off*	Force the printer to use the HTTPS connections.
Enable FTP/TFTP Off On*	Send files using FTP.
Local Domains	Specify domain names for HTTP and FTP servers. This menu item appears only in the Embedded Web Server.

Menu item	Description
HTTP Proxy IP Address	Configure the HTTP and FTP server settings. HTTP Proxy IP Address and FTP Proxy IP Address appear only in the Embedded Web Server.
FTP Proxy IP Address	
HTTP Default IP Port 1–65535 (80*)	
HTTPS Device Certificate	
FTP Default IP Port 1–65535 (21*)	
Timeout for HTTP/FTP Requests 1–299 (30*)	Specify the amount of time before the server connection stops.
Retries for HTTP/FTP Requests 1–299 (3*)	Set the number of retries to connect to the HTTP/FTP server.
* An asterisk next to a value indicates the factory default setting.	

USB

Menu item	Description
PCL SmartSwitch Off On*	Set the printer to switch to PCL emulation when a print job received through a USB port requires it, regardless of the default printer language. If PCL SmartSwitch is off, then the printer does not examine incoming data and uses the default printer language specified in the Setup menu.
PS SmartSwitch Off On*	Set the printer to switch to PS emulation when a print job received through a USB port requires it, regardless of the default printer language. If PS SmartSwitch is off, then the printer does not examine incoming data and uses the default printer language specified in the Setup menu.
Mac Binary PS On Auto* Off	Set the printer to process Macintosh binary PostScript print jobs. • When set to On, the printer processes raw binary PostScript print jobs from computers using the Macintosh operating system. • When set to Auto, the printer processes print jobs from computers using either Windows or Macintosh operating systems

Menu item	Description
	• When set to Off, the printer filters PostScript print jobs using the standard protocol.
Enable USB Port Disable Enable*	Enable the standard USB port.
* An asterisk next to a value indicates the factory default setting.	

Restrict external network access

Menu item	Description
Restrict external network access Off* On	Restrict access to network sites.
External network address	Specify the network addresses with restricted access.
E-mail address for notification	Specify an e-mail address to send a notification of logged events.
Ping frequency 1–300 (10*)	Specify the network query interval in seconds.
Subject	Specify the subject and message of the notification e-mail.
Message	
* An asterisk next to a value indicates the factory default setting.	

Security

Login Methods

Public

Menu item	Description
Manage Permissions Function Access Held Jobs Access Cancel Jobs at the Device Change Language Internet Printing Protocol (IPP) B/W Print Network Folder - Scan	Control access to the printer functions.
Manage Permissions Administrative Menus Security Menu Network/Ports Menu Paper Menu Reports Menu Function Configuration Menus Supplies Menu SE Menu Device Menu	Control access to the printer menus.
Manage Permissions Device Management Remote Management Firmware Updates Import / Export All Settings Out of Service Erase Embedded Web Server Access	Control access to the printer management options.

Local Accounts

Menu item	Description
Add User User Name/Password User Name Password PIN	Create local accounts to manage access to the printer functions.
Manage Groups/Permissions Add Group Import Access Controls Function Access Administrative Menus Device Management All Users Import Access Controls Function Access Administrative Menus Device Management Admin Function Access Administrative Menus Device Management	Control group or user access to the printer functions, applications, and security settings.

Certificate Management

Menu item	Menu item
Configure Certificate Defaults Common Name Organization Name Unit Name Country/Region Province Name City Name Subject Alternate Name	Set the default values for generated certificates.
Device Certificates	Generate, delete, or view device certificates.
Manage CA Certificates	Load, delete, or view Certificate Authority (CA) certificates.

Login Restrictions

Menu item	Description
Login failures 1–10 (3*)	Specify the number of failed login attempts before the user gets locked out.
Failure time frame 1–60 minutes (5*)	Specify the time frame between failed login attempts before the user gets locked out.
Lockout time 1–60 minutes (5*)	Specify the lockout duration.
Web Login Timeout 1–120 minutes (10*)	Specify the delay for a remote login before the user is logged off automatically.
* An asterisk next to a value indicates the factory default setting.	

Erase Temporary Data Files

Menu item	Description
Stored in onboard memory Off* On	Delete all files stored on the printer memory.
* An asterisk next to a value indicates the factory default setting.	

Miscellaneous

Menu item	Description
Print Permission Off* On	Allow the user to print.
Security Reset Jumper Enable “Guest” access* No Effect	Specify user access to the printer. • The jumper is located beside a lock icon on the controller board. • Enable “Guest” access gives anyone access to all aspects of the printer. • No Effect may make access to the printer impossible when the required security information is unavailable.
Minimum Password Length 0–32	Specify the password length.
* An asterisk next to a value indicates the factory default setting.	

Reports

Menu Settings Page

Menu item	Description
Menu Settings Page	Print a report that contains the printer menus.

Device

Menu item	Description
Device Information	Print a report that contains information about the printer.
Device Statistics	Print a report about printer usage and supply status.
Profile List	Print a list of profiles that are stored in the printer.
Asset Report	Print a report that contains the printer serial number and model name.

Print

Menu item	Description
Print Fonts PCL Fonts PostScript Fonts	Print samples and information about the fonts that are available in each printer language.

Network

Menu item	Description
Network Setup Page	Print a page that shows the configured network and wireless settings on the printer. This menu item appears only in network printers or printers connected to print servers.
Wi-Fi Direct Connected Clients	Print a page that shows the list of devices that are connected to the printer using Wi-Fi Direct. This menu item appears only when Enable Wi-Fi Direct is set to On.

Troubleshooting

Menu item	Description
Print Quality Test Pages	Print sample pages to identify and correct print quality defects.

7

Maintain the Printer

This chapter contains:

- Checking the Status of Parts and Supplies 98
- Configuring supply notifications 99
- Setting up e-mail alerts 100
- Viewing reports 101
- Ordering Parts and Supplies 102
- Replacing parts and supplies 103
- Cleaning printer parts 108
- Saving energy and paper 109
- Moving the printer to another location 110

Checking the Status of Parts and Supplies

1. From the control panel, navigate to **Settings > OK > Reports > OK > Device > OK > Device Statistics > OK**.
2. From the Supply Information section of the pages printed, check the status of parts and supplies.

Configuring supply notifications

1. Open a web browser, and then type the printer IP address in the address field.
   - View the printer IP address on the printer home screen. The IP address appears as four sets of numbers separated by periods, such as 123.123.123.123.
   - If you are using a proxy server, then temporarily disable it to load the web page correctly.
2. Click **Settings > OK > Device > OK > Notifications > OK**
3. From the Supplies menu, click **Custom Supply Notifications**.
4. Select a notification for each supply item.
5. Apply the changes.

Setting up e-mail alerts

Configure the printer to send e-mail alerts when supplies are low, when paper must be changed or added, or when there is a paper jam.

1. Open a web browser, and then type the printer IP address in the address field.
   - View the printer IP address on the printer home screen. The IP address appears as four sets of numbers separated by periods, such as 123.123.123.123.
   - If you are using a proxy server, then temporarily disable it to load the web page correctly.
2. Click **Settings > OK > Device > OK > Notifications > OK > E-mail Alert Setup**, and then configure the settings.
3. Click **Setup E-mail Lists and Alerts**, and then configure the settings.
4. Apply the changes.

Note: For more information on SMTP server settings, contact your e-mail provider.

Viewing reports

You can view some reports from the Embedded Web Server. These reports are useful for assessing the status of the printer, network, and supplies.

1. Open a Web browser, and then type the printer IP address in the address field.
   - View the printer IP address on the printer home screen. The IP address appears as four sets of numbers separated by periods, such as 123.123.123.123.
   - If you are using a proxy server, then temporarily disable it to load the Web page correctly.
2. Click **Reports**, and then click the type of report you want to view.

Ordering Parts and Supplies

To view and order parts and supplies for your printer, go to https://www.xerox.com/supplies, then enter your product in the search field.

Note: All life estimates for printer supplies assume printing on letter or A4-size plain paper.

Warning: Failure to maintain optimum printer performance, or to replace parts and supplies, may cause damage to your printer.

Using Genuine Xerox Parts and Supplies

Your Xerox printer is designed to function best with genuine Xerox parts and supplies. Use of third-party parts or supplies can affect the performance, reliability, or life of the printer and its imaging components. It can also affect warranty coverage. Damage caused by the use of third-party parts or supplies is not covered by the warranty.

All life indicators are designed to function with Xerox supplies and parts and can deliver unpredictable results if third-party supplies are used. Imaging component usage beyond the intended life can damage your Xerox printer or associated components.

Warning: Supplies and parts without Return Program agreement terms may be reset and remanufactured. However, the manufacturer's warranty does not cover any damage caused by non-genuine supplies or parts. Resetting counters on the supply or part without proper remanufacturing can cause damage to your printer. After resetting the supply or part counter, your printer may display an error indicating the presence of the reset item.

Replacing parts and supplies

Replacing the Toner Cartridge

1. Open the front door.

   Warning—Potential Damage: To prevent damage from electrostatic discharge, touch any exposed metal frame of the printer before accessing or touching interior areas of the printer.

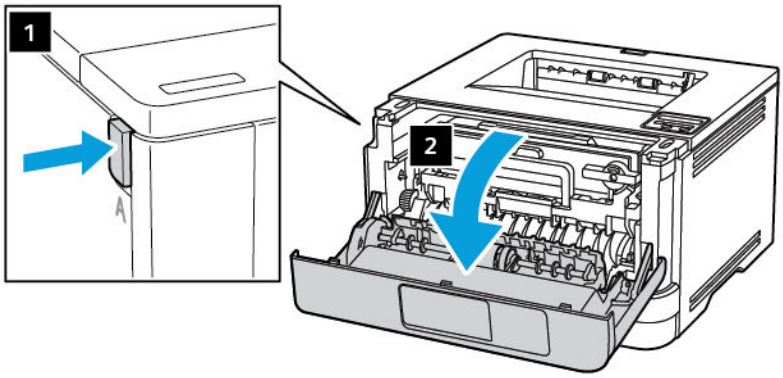

2. Remove the imaging unit.

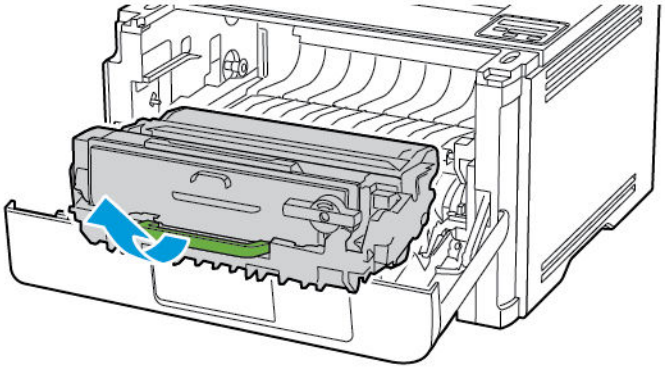

3. Twist the blue latch, and then remove the used toner cartridge from the imaging unit.

   Warning—Potential Damage: Do not expose the imaging unit to direct light for more than 10 minutes. Extended exposure to light may cause print quality problems.

   Warning—Potential Damage: Do not touch the photoconductor drum. Doing so may affect the quality of future print jobs.

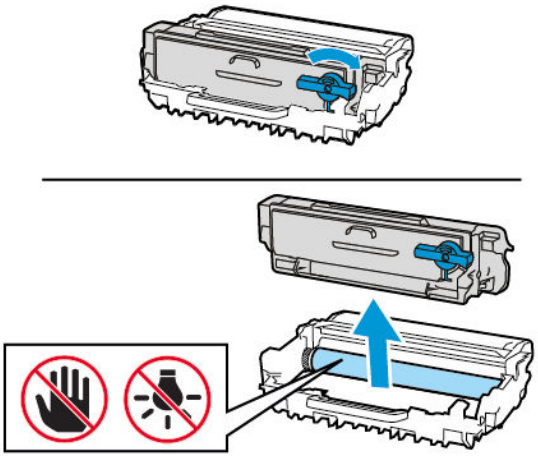

4. Unpack the new toner cartridge.
5. Shake the toner cartridge to redistribute the toner.

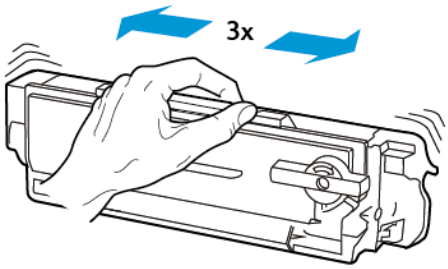

6. Insert the new toner cartridge into the imaging unit until it clicks into place.

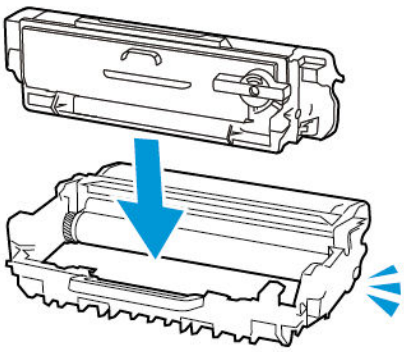

7. Insert the imaging unit.

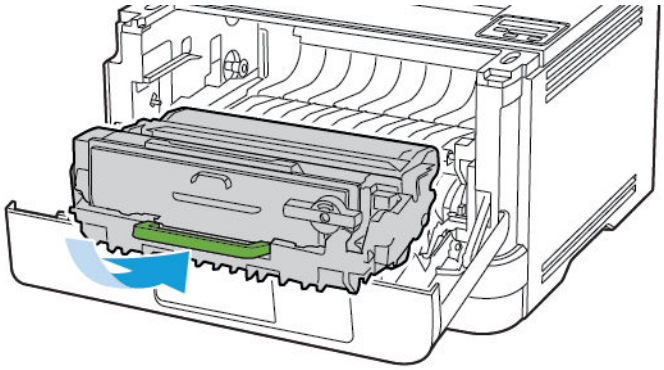

8. Close the door.

Replacing the imaging unit

1. Open the front door.

Warning: To prevent damage from electrostatic discharge, touch any exposed metal frame of the printer before accessing or touching interior areas of the printer.

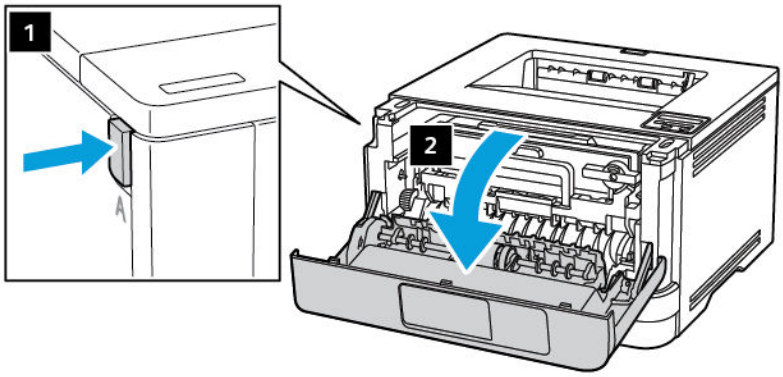

2. Remove the used imaging unit.

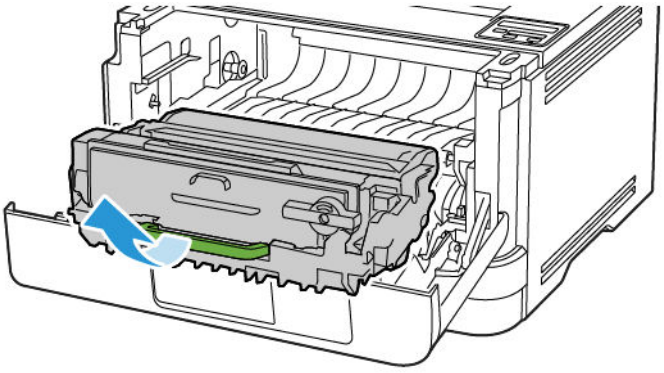

3. Twist the blue latch, and then remove the toner cartridge from the used imaging unit.

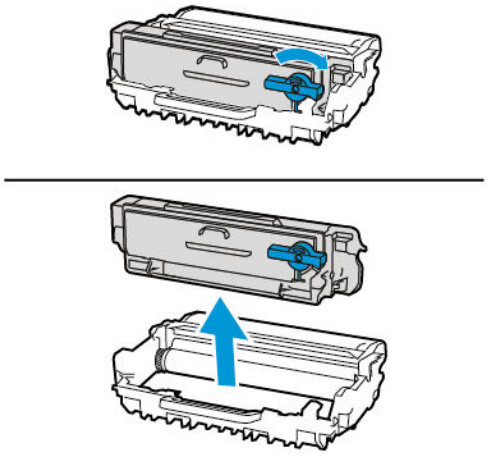

4. Unpack the new imaging unit, and then insert the toner cartridge until it *clicks* into place.

Warning: Do not expose the imaging unit to direct light for more than 10 minutes. Extended exposure to light may cause print quality problems.

Warning: Do not touch the photoconductor drum. Doing so may affect the quality of future print jobs.

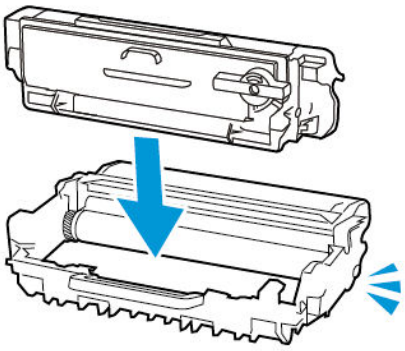

5. Insert the new imaging unit.

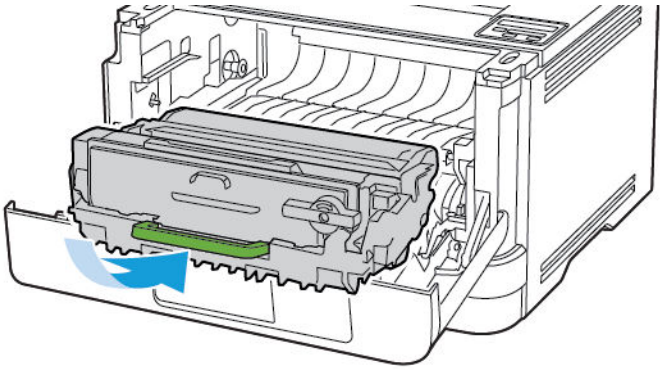

6. Close the door.

Replacing the tray

1. Remove the used tray.

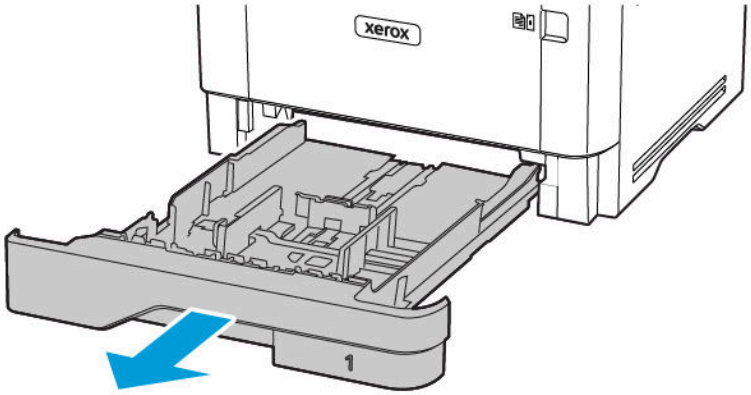

2. Unpack the new tray.
3. Insert the new tray.

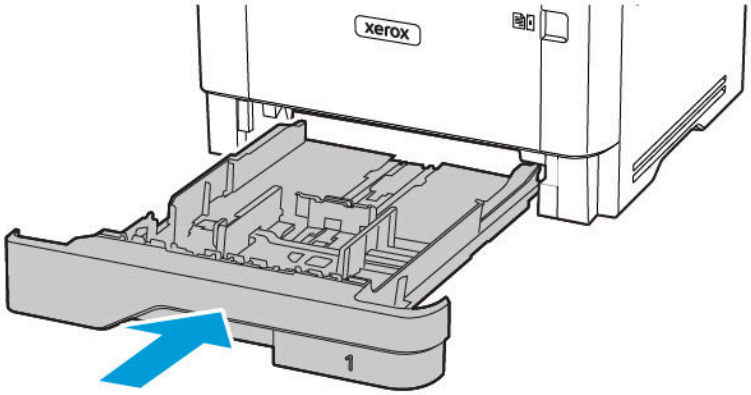

Cleaning printer parts

Cleaning the printer

CAUTION—SHOCK HAZARD: To avoid the risk of electrical shock when cleaning the exterior of the printer, unplug the power cord from the electrical outlet and disconnect all cables from the printer before proceeding.

- Perform this task after every few months.
- Damage to the printer caused by improper handling is not covered by the printer warranty.

1. Turn off the printer, and then unplug the power cord from the electrical outlet.
2. Remove paper from the standard output tray and multipurpose feeder.
3. Remove any dust, lint, and pieces of paper around the printer using a soft brush or vacuum.
4. Wipe the outside of the printer with a damp, soft, lint-free cloth.
   - Do not use household cleaners or detergents as they may damage the finish of the printer.
   - Make sure that all areas of the printer are dry after cleaning.
5. Connect the power cord to the electrical outlet, and then turn on the printer.

CAUTION—POTENTIAL INJURY: To avoid the risk of fire or electrical shock, connect the power cord to an appropriately rated and properly grounded electrical outlet that is near the product and easily accessible.

Saving energy and paper

Configuring the power save mode settings

Sleep Mode

1. From the control panel, navigate to: **Settings > OK > Device > OK > Power Management > OK > Timeouts > OK > Sleep Mode > OK**
2. Enter the amount of time that the printer stays idle before it enters Sleep mode.

Hibernate Mode

1. From the control panel, navigate to: **Settings > OK > Device > OK > Power Management > OK > Timeouts > OK > Hibernate Mode > OK**
2. Select the amount of time before the printer enters Hibernate mode.
   - Make sure to wake the printer from Hibernate mode before sending a print job.
   - To wake the printer from Hibernate mode, press the power button.
   - The Embedded Web Server is disabled when the printer is in Hibernate mode.

Conserving supplies

- Print on both sides of the paper.

  Note: Two-sided printing is the default setting in the print driver.

- Print multiple pages on a single sheet of paper.
- Use the preview feature to see how the document looks like before printing it.
- Print one copy of the document to check its content and format for accuracy.

Moving the printer to another location

CAUTION—POTENTIAL INJURY: If the printer weight is greater than 20kg (44lb), then it may require two or more people to lift it safely.

CAUTION—POTENTIAL INJURY: To avoid the risk of fire or electrical shock, use only the power cord provided with this product or the manufacturer's authorized replacement.

CAUTION—POTENTIAL INJURY: When moving the printer, follow these guidelines to avoid personal injury or printer damage:

- Make sure that all doors and trays are closed.
- Turn off the printer, and then unplug the power cord from the electrical outlet.
- Disconnect all cords and cables from the printer.
- If the printer has separate floor-standingoptional trays or output optionsattached to it, then disconnect them before moving the printer.
- If the printer has a caster base, then carefully roll it to the new location. Use caution when passing over thresholds and breaks in flooring.
- If the printer does not have a caster base but is configured with optional trays or output options, then remove the output options and lift the printer off the trays. Do not try to lift the printer and any options at the same time.
- Always use the handholds on the printer to lift it.
- Any cart used to move the printer must have a surface able to support the full footprint of the printer.
- Any cart used to move the hardware options must have a surface able to support the dimensions of the options.
- Keep the printer in an upright position.
- Avoid severe jarring movements.
- Make sure that your fingers are not under the printer when you set it down.
- Make sure that there is adequate clearance around the printer.

Note: Damage to the printer caused by improper moving is not covered by the printer warranty.

8

Troubleshoot a Problem

This chapter contains:

- Print quality problems 112
- Printing problems 113
- The printer is not responding 147
- Network connection problems 149
- Issues with supplies 152
- Clearing Jams 154
- Paper feed problems 168
- Contacting customer support 173

Print quality problems

Find the image that resembles the print quality problem you are having, and then click the link below it to read problem-solving steps.

- Blank or white pages
- Dark print
- Fine lines are not printed correctly
- Folded or wrinkled paper
- Gray background
- Horizontal light bands
- Incorrect margins
- Light print
- Mottled print and dots
- Paper curl
- Print crooked or skewed
- Print crooked or skewed
- Solid black pages
- Text or images cut off
- Toner easily rubs off
- Vertical dark bands
- Vertical dark lines or streaks
- Vertical dark streaks with print missing
- Vertical light bands
- Vertical white lines

Printing problems

Print quality is poor

Blank or white pages

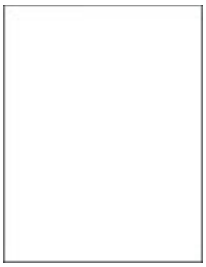

Note: Before solving the problem, print the Print Quality Test Pages. From the control panel, navigate to **Settings** > **Troubleshooting** > **Print Quality Test Pages**. For non-touch-screen printer models, press OK to navigate through the settings.

Action	Yes	No
Step 1 1 Check if the printer is using a genuine and supported Xerox toner cartridge. If the cartridge is not supported, then install a supported one. 2 Print the document. Is the printer printing blank or white pages?	Go to step 2.	The problem is solved.
Step 2 1 Remove the imaging unit. Do not expose the imaging unit to direct light for more than 10 minutes. Extended exposure to light may cause print quality problems. Do not touch the photoconductor drum under the imaging unit. Doing so may affect the quality of future print jobs. 2 Check the imaging unit for signs of damage.	Go to step 3.	The problem is solved.

Action	Yes	No
Make sure that the photoconductor drum contact is not bent or out of place. 3 Firmly shake the imaging unit to redistribute the toner. 4 Insert the imaging unit. 5 Print the document. Is the printer printing blank or white pages?		
Step 3 Replace the toner cartridge. Is the printer printing blank or white pages?	Go to step 4.	The problem is solved.
Step 4 Replace the imaging unit. Is the printer printing blank or white pages?	Contact customer support.	The problem is solved.

Dark print

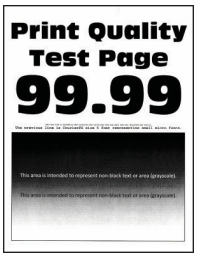

Note: Before solving the problem, print the Print Quality Test Pages. From the control panel, navigate to **Settings** > **Troubleshooting** > **Print Quality Test Pages**. For non-touch-screen printer models, press OK to navigate through the settings.

Action	Yes	No
Step 1 1 Check if the printer is using a genuine and supported Xerox toner cartridge. If the cartridge is not supported, then install a supported one. 2 Print the document. Is the print dark?	Go to step 2.	The problem is solved.
Step 2 1 Turn off the printer, wait for about 10 seconds, and then turn on the printer. 2 Reduce toner darkness. From the control panel, navigate to: **Settings** > **Print** > **Quality** > **Toner Darkness** 3 Print the document. Is the print dark?	Go to step 3.	The problem is solved.
Step 3 1 Depending on your operating system, specify the paper type from the Printing Preferences or Print dialog. • Make sure that the setting matches the paper loaded. • You can also change the setting on the printer control panel. Navigate to **Settings** > **Paper** > **Tray Configuration** > **Paper Size/Type**. 2 Print the document. Is the print dark?	Go to step 4.	The problem is solved.
Step 4 Check if the paper has texture or rough finishes. Are you printing on textured or rough paper?	Go to step 5.	Go to step 6.

Action	Yes	No
Step 5 1 Replace textured paper with plain paper. 2 Print the document. Is the print dark?	Go to step 6.	The problem is solved.
Step 6 1 Load paper from a fresh package. Paper absorbs moisture due to high humidity. Store paper in its original wrapper until you are ready to use it. 2 Print the document. Is the print dark?	Go to step 7.	The problem is solved.
Step 7 1 Remove, and then insert the imaging unit. Do not expose the imaging unit to direct light for more than 10 minutes. Extended exposure to light may cause print quality problems. Do not touch the photoconductor drum under the imaging unit. Doing so may affect the quality of future print jobs. 2 Print the document. Is the print dark?	Go to step 8.	The problem is solved.
Step 8 1 Replace the imaging unit. 2 Print the document. Is the print dark?	Contact customer support.	The problem is solved.

Fine lines are not printed correctly

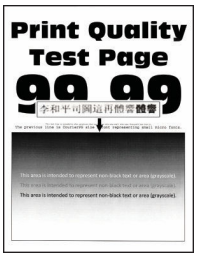

Note: Before solving the problem, print the Print Quality Test Pages. From the control panel, navigate to **Settings** > **Troubleshooting** > **Print Quality Test Pages**. For non-touch-screen printer models, press OK to navigate through the settings.

Action	Yes	No
Step 1 1 Check if the printer is using a genuine and supported Xerox toner cartridge. If the cartridge is not supported, then install a supported one. 2 Print the document. Are fine lines not printed correctly?	Go to step 2.	The problem is solved.
Step 2 1 Increase toner darkness. From the control panel, navigate to: **Settings** > **Print** > **Quality** > **Toner Darkness** 2 Print the document. Are fine lines not printed correctly?	Contact customer support.	The problem is solved.

Folded or wrinkled paper

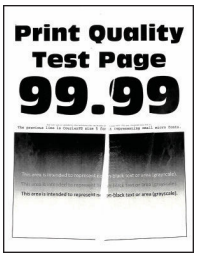

Note: Before solving the problem, print the Print Quality Test Pages. From the control panel, navigate to **Settings** > **Troubleshooting** > **Print Quality Test Pages**. For non-touch-screen printer models, press OK to navigate through the settings.

Action	Yes	No
Step1 1 Check if the printer is using a genuine and supported Xerox toner cartridge. If the cartridge is not supported, then install a supported one. 2 Print the document. Is the paper folded or wrinkled?	Go to step 2.	The problem is solved.
Step2 1 Load paper from a fresh package. Paper absorbs moisture due to high humidity. Store paper in its original wrapper until you are ready to use it. 2 Print the document. Is the paper folded or wrinkled?	Go to step 3.	The problem is solved.
Step3 1 Depending on your operating system, specify the paper type from the Printing Preferences or Print dialog. • Make sure that the setting matches the paper loaded. • You can also change the setting from the printer control panel. Navigate to **Settings** > **Paper** > **Tray Configuration** > **Paper Size/Type**. 2 Print the document. Is the paper folded or wrinkled?	Contact customer support.	The problem is solved.

Gray background

Note: Before solving the problem, print the Print Quality Test Pages. From the control panel, navigate to **Settings** > **Troubleshooting** > **Print Quality Test Pages**. For non-touch-screen printer models, press OK to navigate through the settings.

Action	Yes	No
Step 1 1 Turn off the printer, wait for 10 seconds, and then turn on the printer. 2 Decrease toner darkness. From the control panel, navigate to: **Settings** > **Print** > **Quality** > **Toner Darkness** 3 Print the document. Does gray background appear on prints?	Go to step 2.	The problem is solved.
Step 2 1 Check if the printer is using a genuine and supported Xerox toner cartridge. If the toner cartridge is not supported, then install a supported one. 2 Print the document. Does gray background appear on prints?	Go to step 3.	The problem is solved.
Step 3 1 Depending on your operating system, specify the paper type from the Printing Preferences or Print dialog.	Go to step 4.	The problem is solved.

Action	Yes	No
• Make sure that the setting matches the paper loaded. • You can also change the setting from the printer control panel. Navigate to **Settings** > **Paper** > **Tray Configuration** > **Paper Size/Type**. 2 Print the document. Does gray background appear on prints?		
Step 4 1 Remove, and then insert the imaging unit. Do not expose the imaging unit to direct light for more than 10 minutes. Extended exposure to light may cause print quality problems. Do not touch the photoconductor drum under the imaging unit. Doing so may affect the quality of future print jobs. 2 Print the document. Does gray background appear on prints?	Go to step 5.	The problem is solved.
Step 5 1 Update the printer firmware. For more information, see Updating Firmware. 2 Print the document. Does gray background appear on prints?	Go to step 6.	The problem is solved.
Step 6 1 Replace the imaging unit. 2 Print the document. Does gray background appear on prints?	Contact customer support.	The problem is solved.

Incorrect margins

Action	Yes	No
Step 1 1 Adjust the paper guides to the correct position for the paper loaded. 2 Print the document. Are the margins correct?	The problem is solved.	Go to step 2.
Step 2 1 Set the paper size. From the control panel, navigate to: **Settings > Paper > Tray Configuration > Paper Size/ Type** 2 Print the document. Are the margins correct?	The problem is solved.	Go to step 3.
Step 3 1 Depending on your operating system, specify the paper size from the Printing Preferences or Print dialog. Make sure that the setting matches the paper loaded. 2 Print the document. Are the margins correct?	The problem is solved.	Contact customer support.

Light print

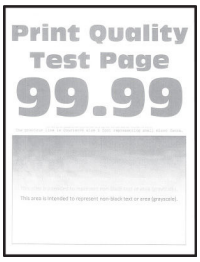

Note: Before solving the problem, print the Print Quality Test Pages. From the control panel, navigate to **Settings** > **Troubleshooting** > **Print Quality Test Pages**. For non-touch-screen printer models, press OK to navigate through the settings.

Action	Yes	No
Step 1 1 Check if the printer is using a genuine and supported Xerox toner cartridge. If the cartridge is not supported, then install a supported one. 2 Print the document. Is the print light?	Go to step 2.	The problem is solved.
Step 2 1 Turn off the printer, wait for about 10 seconds, and then turn on the printer. 2 Increase toner darkness. From the control panel, navigate to: **Settings** > **Print** > **Quality** > **Toner Darkness** 3 Print the document. Is the print light?	Go to step 3.	The problem is solved.
Step 3 1 Depending on your operating system, specify the paper type from the Printing Preferences or Print dialog. • Make sure that the setting matches the paper loaded.	Go to step 4.	The problem is solved.

Action	Yes	No
• You can also change the setting on the printer control panel. Navigate to **Settings** > **Paper** > **Tray Configuration** > **Paper Size/Type**. 2 Print the document. Is the print light?		
Step 4 1 Depending on your operating system, specify the print resolution from the Printing Preferences or Print dialog. 2 Set the resolution to **600 dpi**. 3 Print the document. Is the print light?	Go to step 5.	The problem is solved.
Step 5 1 Remove the imaging unit. Do not expose the imaging unit to direct light for more than 10 minutes. Extended exposure to light can cause print quality problems. Do not touch the photoconductor drum under the imaging unit. Doing so may affect the quality of future print jobs. 2 Firmly shake the imaging unit to redistribute the toner. 3 Insert the imaging unit. 4 Turn off the printer, wait for 10 seconds, and then turn on the printer. 5 Print the document. Is the print light?	Go to step 6.	The problem is solved.

Action	Yes	No
Step 6 1 Check the status of the toner cartridge. From the control panel, navigate to: **Settings** > **Reports** > **Device** > **Device Statistics** 2 From the Supply Information section of the pages printed, check the status of the toner cartridge. Is the toner cartridge near end of life?	Go to step 7.	Contact customer support.
Step 7 1 Replace the toner cartridge. 2 Print the document. Is the print light?	Contact customer support.	The problem is solved.

Mottled print and dots

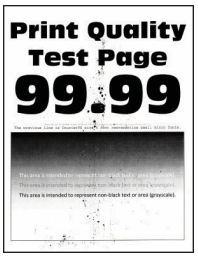

Note: Before solving the problem, print the Print Quality Test Pages. From the control panel, navigate to **Settings** > **Troubleshooting** > **Print Quality Test Pages**. For non-touch-screen printer models, press **OK** to navigate through the settings.

Action	Yes	No
Step 1 1 Check if the printer is using a genuine and supported Xerox toner cartridge. If the cartridge is not supported, then install a supported one. 2 Print the document. Is the print mottled?	Go to step 2.	The problem is solved.
Step 2 Check the printer for leaked toner contamination. Is the printer free of leaked toner?	Go to step 3.	Contact customer support.
Step 3 1 Check the status of the imaging unit. From the control panel, navigate to: **Settings > Reports > Device > Device Statistics** 2 From the Supply Information section of the pages printed, check the status of the imaging unit. Is the imaging unit near end of life?	Go to step 4.	Contact customer support.
Step 4 1 Replace the imaging unit. 2 Print the document. Is the print mottled?	Contact customer support.	The problem is solved.

Paper curl

Note: Before solving the problem, print the Print Quality Test Pages. From the control panel, navigate to **Settings** > **Troubleshooting** > **Print Quality Test Pages**. For non-touch-screen printer models, press OK to navigate through the settings.

Action	Yes	No
Step 1 1 Check if the paper loaded is supported. If paper is not supported, then load a supported paper. 2 Print the document. Is the paper curled?	Go to step 2.	The problem is solved.
Step 2 1 Check if the printer is using a genuine and supported Xerox toner cartridge. If the cartridge is not supported, then install a supported one. 2 Print the document. Is the paper curled?	Go to step 3.	The problem is solved.
Step 3 1 Adjust the guides in the tray to the correct position for the paper loaded. 2 Print the document. Is the paper curled?	Go to step 4.	The problem is solved.
Step 4 1 Depending on your operating system, specify the paper size and paper type from the	Go to step 5.	The problem is solved.

Action	Yes	No
Printing Preferences or Print dialog. • Make sure that the settings match the paper loaded. • You can also change the setting on the printer control panel. Navigate to **Settings** > **Paper** > **Tray Configuration** > **Paper Size/Type**. 2 Print the document. Is the paper curled?		
Step 5 1 Remove paper, flip it over, and then reload paper. 2 Print the document. Is the paper curled?	Go to step 6.	The problem is solved.
Step 6 1 Load paper from a fresh package. Paper absorbs moisture due to high humidity. Store paper in its original wrapper until you are ready to use it. 2 Print the document. Is the paper curled?	Contact customer support.	The problem is solved.

Print crooked or skewed

Note: Before solving the problem, print the Print Quality Test Pages. From the control panel, navigate to **Settings** > **Troubleshooting** > **Print Quality Test Pages**. For non-touch-screen printer models, press OK to navigate through the settings.

Action	Yes	No
Step 1 1 Adjust the guides in the tray to the correct position for the paper loaded. 2 Print the document. Is the print crooked or skewed?	Go to step 2.	The problem is solved.
Step 2 1 Load paper from a fresh package. Paper absorbs moisture due to high humidity. Store paper in its original wrapper until you are ready to use it. 2 Print the document. Is the print crooked or skewed?	Go to step 3.	The problem is solved.
Step 3 1 Check if the paper loaded is supported. If paper is not supported, then load a supported paper. 2 Print the document. Is the print crooked or skewed?	Contact customer support.	The problem is solved.
Step 4 1 For two-sided printing, check if the paper size setting in the duplex unit is set correctly. Letter, legal, Oficio, or folio must be set to Letter. 2 Print the document. Is the print crooked or skewed?	Contact customer support.	The problem is solved.

Solid black pages

Note: Before solving the problem, print the Print Quality Test Pages. From the control panel, navigate to **Settings** > **Troubleshooting** > **Print Quality Test Pages**. For non-touch-screen printer models, press OK to navigate through the settings.

Action	Yes	No
Step 1 1 Check if the printer is using a genuine and supported Xerox toner cartridge. If the toner cartridge is not supported, then install a supported one. 2 Print the document. Is the printer printing solid black pages?	Go to step 2.	The problem is solved.
Step 2 1 Remove, and then insert the imaging unit. Do not expose the imaging unit to direct light for more than 10 minutes. Extended exposure to light may cause print quality problems. Do not touch the photoconductor drum under the imaging unit. Doing so may affect the quality of future print jobs. 2 Print the document. Is the printer printing solid black pages?	Go to step 3.	The problem is solved.

Action	Yes	No
Step 3 Check the imaging unit for signs of damage. Make sure that the photoconductor drum contact is not bent or out of place. Is the imaging unit free from damage?	Contact customer support.	Go to step 4.
Step 4 1 Replace the imaging unit. 2 Print the document. Is the printer printing solid black pages?	Contact customer support.	The problem is solved.

Text or images cut off

Note: Before solving the problem, print the Print Quality Test Pages. From the control panel, navigate to **Settings** > **Troubleshooting** > **Print Quality Test Pages**. For non-touch-screen printer models, press OK to navigate through the settings.

Action	Yes	No
Step 1 1 Check if the printer is using a genuine and supported Xerox toner cartridge. If the toner cartridge is not supported, then install a supported one. 2 Print the document. Are text or images cut off?	Go to step 2.	The problem is solved.
Step 2 1 Remove, and then insert the imaging unit. Do not expose the imaging unit to direct light for more than 10 minutes. Extended exposure to light may cause print quality problems. Do not touch the photoconductor drum under the imaging unit. Doing so may affect the quality of future print jobs. 2 Print the document. Are text or images cut off?	Go to step 3.	The problem is solved.
Step 3 1 Replace the imaging unit. 2 Print the document. Are text or images cut off?	Contact customer support.	The problem is solved.

Toner easily rubs off

Note: Before solving the problem, print the Print Quality Test Pages. From the control panel, navigate to **Settings** > **Troubleshooting** > **Print Quality Test Pages**. For non-touch-screen printer models, press OK to navigate through the settings.

Action	Yes	No
Step 1 1 Check if the printer is using a genuine and supported Xerox toner cartridge. If the toner cartridge is not supported, then install a supported one. 2 Print the document. Does toner easily rub off?	Go to step 2.	The problem is solved.
Step 2 1 Depending on your operating system, specify the paper type from the Printing Preferences or Print dialog. • Make sure that the setting matches the paper loaded. • You can also change the setting on the printer control panel. Navigate to **Settings** > **Paper** > **Tray Configuration** > **Paper Size/Type**. 2 Print the document. Does toner easily rub off?	Contact customer support.	The problem is solved.

Horizontal light bands

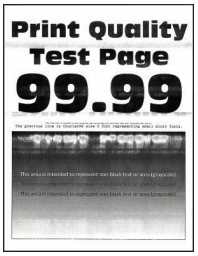

Note: Before solving the problem, print the Print Quality Test Pages. From the control panel, navigate to **Settings** > **Troubleshooting** > **Print Quality Test Pages**. For non-touch-screen printer models, press OK to navigate through the settings.

Action	Yes	No
Step 1 1 Check if the printer is using a genuine and supported Xerox toner cartridge. If the cartridge is not supported, then install a supported one. 2 Print the document. Do horizontal light bands appear on prints?	Go to step 2.	The problem is solved.
Step 2 1 Remove, and then insert the imaging unit. Do not expose the imaging unit to direct light for more than 10 minutes. Extended exposure to light may cause print quality problems. Do not touch the photoconductor drum under the imaging unit. Doing so may affect the quality of future print jobs. 2 Print the document. Do horizontal light bands appear on prints?	Go to step 3.	The problem is solved.
Step 3 1 Replace the imaging unit. 2 Print the document. Do horizontal light bands appear on prints?	Contact customer support.	The problem is solved.

Vertical light bands

Note: Before solving the problem, print the Print Quality Test Pages. From the control panel, navigate to **Settings** > **Troubleshooting** > **Print Quality Test Pages**. For non-touch-screen printer models, press OK to navigate through the settings.

Action	Yes	No
Step 1 1 Check if the printer is using a genuine and supported Xerox toner cartridge. If the cartridge is not supported, then install a supported one. 2 Print the document. Do vertical light bands appear on prints?	Go to step 2.	The problem is solved.
Step 2 1 Check the status of the toner cartridge. From the control panel, navigate to: **Settings** > **Reports** > **Device** > **Device Statistics** 2 From the Supply Information section of the pages printed, check the status of the toner cartridge. Do vertical light bands appear on prints?	Go to step 3.	The problem is solved.
Step 3 1 Replace the toner cartridge. 2 Print the document. Do vertical light bands appear on prints?	Contact customer support.	The problem is solved.

Vertical white lines

Note: Before solving the problem, print the Print Quality Test Pages. From the control panel, navigate to **Settings** > **Troubleshooting** > **Print Quality Test Pages**. For non-touch-screen printer models, press OK to navigate through the settings.

Action	Yes	No
Step 1 1 Check if the printer is using a genuine and supported Xerox toner cartridge. If the cartridge is not supported, then install a supported one. 2 Print the document. Do vertical white lines appear on prints?	Go to step 2.	The problem is solved.
Step 2 1 Depending on your operating system, specify the paper type from the Printing Preferences or Print dialog. • Make sure that the setting matches the paper loaded. • You can also change the setting on the printer control panel. Navigate to **Settings** > **Paper** > **Tray Configuration** > **Paper Size/Type**. 2 Print the document. Do vertical white lines appear on prints?	Contact customer support.	The problem is solved.

Vertical dark bands

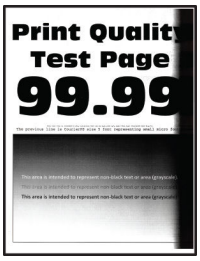

Note: Before solving the problem, print the Print Quality Test Pages. From the control panel, navigate to **Settings** > **Troubleshooting** > **Print Quality Test Pages**. For non-touch-screen printer models, press OK to navigate through the settings.

Action	Yes	No
Step 1 1 Check if the printer is using a genuine and supported Xerox toner cartridge. If the toner cartridge is not supported, then install a supported one. 2 Print the document. Do vertical dark bands appear on prints?	Go to step 2.	The problem is solved.
Step 2 1 Remove, and then insert the imaging unit. Do not expose the imaging unit to direct light for more than 10 minutes. Extended exposure to light may cause print quality problems. Do not touch the photoconductor drum under the imaging unit. Doing so may affect the quality of future print jobs. 2 Print the document. Do vertical dark bands appear on prints?	Go to step 3.	The problem is solved.
Step 3 1 Check if a bright light enters the right side of the printer, and move the printer if necessary. 2 Print the document. Do vertical dark bands appear on prints?	Contact customer support.	The problem is solved.

Vertical dark lines or streaks

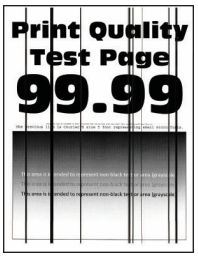

Note: Before solving the problem, print the Print Quality Test Pages. From the control panel, navigate to **Settings** > **Troubleshooting** > **Print Quality Test Pages**. For non-touch-screen printer models, press OK to navigate through the settings.

Action	Yes	No
Step 1 1 Check if the printer is using a genuine and supported Xerox toner cartridge. If the toner cartridge is not supported, then install a supported one. 2 Print the document. Do vertical dark lines or streaks appear on prints?	Go to step 2.	The problem is solved.
Step 2 1 Remove, and then reinstall the imaging unit. Do not expose the imaging unit to direct light for more than 10 minutes. Extended exposure to light can cause print quality problems. Do not touch the photoconductor drum under the imaging unit. Doing so may affect the quality of future print jobs. 2 Print the document. Do vertical dark lines or streaks appear on prints?	Go to step 3.	The problem is solved.
Step 3 1 Replace the imaging unit. 2 Print the document. Do vertical dark lines or streaks appear on prints?	Contact customer support.	The problem is solved.

Vertical dark streaks with print missing

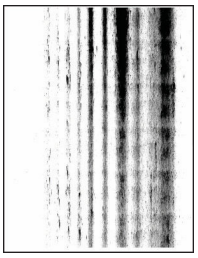

Note: Before solving the problem, print the Print Quality Test Pages. From the control panel, navigate to **Settings** > **Troubleshooting** > **Print Quality Test Pages**. For non-touch-screen printer models, press OK to navigate through the settings.

Action	Yes	No
Step 1 1 Remove, and then insert the imaging unit. Do not expose the imaging unit to direct light for more than 10 minutes. Extended exposure to light may cause print quality problems. Do not touch the photoconductor drum under the imaging unit. Doing so may affect the quality of future print jobs. 2 Print the document. Do vertical dark streaks with missing images appear on prints?	Go to step 2.	The problem is solved.
Step 2 1 Check if the printer is using a genuine and supported Xerox toner cartridge. If the toner cartridge is not supported, then install a supported one. 2 Print the document. Do vertical dark streaks with missing images appear on prints?	Contact customer support.	The problem is solved.

Repeating defects

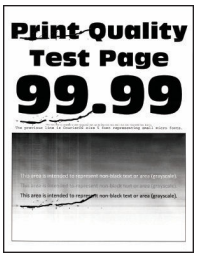

Note: Before solving the problem, print the Print Quality Test Pages. From the control panel, navigate to **Settings** > **Troubleshooting** > **Print Quality Test Pages**. For non-touch-screen printer models, press OK to navigate through the settings.

Action	Yes	No
Step 1 Using the Print Quality Test Pages, check if the distance between the repeating defects is equal to any of the following: **Imaging unit** • 96mm (3.78in.) • 37.7mm (1.48in.) **Toner cartridge** • 43.5mm (1.71in.) • 37.5mm (1.48in.) **Transfer roller** • 52mm (2.05in.) **Fuser** • 79.8mm (3.14in.) • 62.5mm (2.46in.) Does the distance between the repeating defects match the toner cartridge or imaging unit measurements?	Go to step 2. If the repeating defects match the transfer roller or fuser measurements, then contact customer support.	Take note of the distance, and then contact customer support.
Step 2 1 Replace the affected supply item. 2 Print the document. Do the repeating defects appear?	Contact customer support.	The problem is solved.

Print jobs do not print

Action	Yes	No
Step1 1 From the document you are trying to print, open the Print dialog, and then check if you have selected the correct printer. 2 Print the document. Is the document printed?	The problem is solved.	Go to step 2.
Step2 1 Check if the printer is on. 2 Resolve any error messages that appear on the display. 3 Print the document. Is the document printed?	The problem is solved.	Go to step 3.
Step3 1 Check if the ports are working and if the cables are securely connected to the computer and the printer. For more information, see the setup documentation that came with the printer. 2 Print the document. Is the document printed?	The problem is solved.	Go to step 4.
Step4 1 Turn off the printer, wait for about 10 seconds, and then turn on the printer. 2 Print the document. Is the document printed?	The problem is solved.	Go to step 5.
Step5 1 Remove, and then reinstall the print driver. 2 Print the document. Is the document printed?	The problem is solved.	Contact customer support.

Slow printing

Action	Yes	No
Step 1 Make sure that the printer cable is securely connected to the printer and to the computer, print server, option, or other network device. Is the printer printing slow?	Go to step 2.	The problem is solved.
Step 2 1 Make sure that the printer is not in Quiet Mode. From the control panel, navigate to: **Settings** > OK > **Device** > OK > **Maintenance** > OK > **Config Menu** > OK > **Device Operations** > OK > **Quiet Mode** > OK 2 Print the document. Is the printer printing slow?	Go to step 3.	The problem is solved.
Step 3 1 Depending on your operating system, specify the print resolution from the Printing Preferences or Print dialog. 2 Set the resolution to **600 dpi**. 3 Print the document. Is the printer printing slow?	Go to step 4.	The problem is solved.
Step 4 1 From the control panel, navigate to: **Settings** > OK > **Print** > OK > **Quality** > OK > **Print Resolution** > OK 2 Set the resolution to **600 dpi**. 3 Print the document.	Go to step 5.	The problem is solved.

Action	Yes	No
Is the printer printing slow?		
Step 5 1 Depending on your operating system, specify the paper type from the Printing Preferences or Print dialog. • Make sure that the setting matches the paper loaded. • Heavier paper prints more slowly. • Paper narrower than letter, A4, and legal may print more slowly. 2 Print the document. Is the printer printing slow?	Go to step 6.	The problem is solved.
Step 6 1 Make sure that the printer settings for texture and weight match the paper being loaded. From the control panel, navigate to: **Settings** > OK > **Paper** > OK > **Media Configuration** > OK > **Media Types** > OK Rough paper textures and heavy paper weights may print more slowly. 2 Print the document. Is the printer printing slow?	Go to step 7.	The problem is solved.

Action	Yes	No
Step 7 Remove held jobs. Is the printer printing slow?	Go to step 8.	The problem is solved.
Step 8 1 Make sure that the printer is not overheating. • Allow the printer to cool down after a long print job. • Observe the recommended ambient temperature for the printer. For more information, refer to Selecting a location for the printer 2 Print the document. Is the printer printing slow?	Contact customer support.	The problem is solved.

Job prints from the wrong tray or on the wrong paper

Action	Yes	No
Step 1 1 Check if you are printing on the correct paper. 2 Print the document. Is the document printed on the correct paper?	Go to step 2.	Load the correct paper size and paper type.
Step 2 1 Depending on your operating system, specify the paper size and paper type from the Printing Preferences or Print dialog. You can also change the settings on the printer control panel. Navigate to: **Settings** > OK > **Paper** > OK > **Tray Configuration** > OK > **Paper Size/Type** > OK 2 Make sure that the settings match the paper loaded. 3 Print the document. Is the document printed on the correct paper?	The problem is solved.	Go to step 3.
Step 3 1 Check if the trays are linked. For more information, see [File not referenced in map] _ATI_File_Not_Found_x-wc_–file=d@[sedona[wt_low_mono[sfp[dita[linking-and-unlinking-trays.dita]23task745.xml#task745. 2 Print the document. Is the document printed from the correct tray?	The problem is solved.	Contact customer support.

The printer is not responding

Action	Yes	No
Step1 Check if the power cord is connected to the electrical outlet. **CAUTION—POTENTIAL INJURY:** To avoid the risk of fire or electrical shock, connect the power cord to an appropriately rated andproperly grounded electrical outlet that is near the product and easily accessible. Is the printer responding?	The problem is solved.	Go to step 2.
Step2 Check if the electrical outlet is turned off by a switch or breaker. Is the electrical outlet turned off by a switch or breaker?	Turn on the switch or reset the breaker.	Go to step 3.
Step3 Check if the printer is on. Is the printer on?	Go to step 4.	Turn on the printer.
Step4 Check if the printer is in Sleep or Hibernate mode. Is the printer in Sleep or Hibernate mode?	Press the power button to wake the printer.	Go to step 5.
Step5 Check if the cables connecting the printer and the computer are inserted to the correct ports. Are the cables inserted to the correct ports?	Go to step 6.	Insert the cables to the correct ports.
Step6 Turn off the printer, install the hardware options, and then turn on the printer.	The problem is solved.	Go to step 7.

Action	Yes	No
For more information, see the documentation that came with the option. Is the printer responding?		
Step7 Install the correct print driver. Is the printer responding?	The problem is solved.	Go to step 8.
Step8 Turn off the printer, wait for about 10 seconds, and then turn on the printer. Is the printer responding?	The problem is solved.	Contact customer support.

Network connection problems

Cannot open Embedded Web Server

Action	Yes	No
Step1 Check if the printer is on. Is the printer on?	Go to step 2.	Turn on the printer.
Step2 Make sure that the printer IP address is correct. • View the IP address on the home screen. • An IP address appears as four sets of numbers separated by periods, such as 123.123.123.123. Is the printer IP address correct?	Go to step 3.	Type the correct printer IP address in the address field.
Step3 Check if you are using a supported browser: • Internet Explorer version 11 or later • Microsoft Edge • Safari version 6 or later • Google Chrome™ version 32 or later • Mozilla Firefox version 24 or later Is your browser supported?	Go to step 4.	Install a supported browser.
Step4 Check if the network connection is working. Is the network connection working?	Go to step 5.	Contact your administrator.
Step5 Make sure that the cable connections to the printer and print server are secure. For more	Go to step 6.	Secure the cable connections.

Action	Yes	No
information, see the documentation that came with the printer. Are the cable connections secure?		
Step6 Check if the web proxy servers are disabled. Are the web proxy servers disabled?	Go to step 7.	Contact your administrator.
Step7 Access the Embedded Web Server. Did the Embedded Web Server open?	The problem is solved.	Contact customer support.

Cannot connect the printer to the Wi-Fi network

Action	Yes	No
Step 1 Make sure that Active Adapter is set to Auto. From the control panel, navigate to: **Settings** > OK > **Network/Ports** > OK > **Network Overview** > OK > **Active Adapter** > OK > **Auto** > OK Can the printer connect to the Wi-Fi network?	The problem is solved.	Go to step 2.
Step 2 Check if the correct Wi-Fi network is selected. Some routers may share the default SSID. Are you connecting to the correct Wi-Fi network?	Go to step 4.	Go to step 3.
Step 3	The problem is solved.	Go to step 4.

Action	Yes	No
Connect to the correct Wi-Fi network. For more information, see Connecting the Printer to a Wi-Fi Network. Can the printer connect to the Wi-Fi network?		
Step 4 Check the wireless security mode. From the control panel, navigate to: **Settings** > OK > **Network/Ports** > OK > **Wireless** > OK > **Wireless Security Mode** > OK Is the correct wireless security mode selected?	Go to step 6.	Go to step 5.
Step 5 Select the correct wireless security mode. Can the printer connect to the Wi-Fi network?	The problem is solved.	Go to step 6.
Step 6 Make sure that you entered the correct network password. Take note of the spaces, numbers, andcapitalization in the password. Can the printer connect to the Wi-Fi network?	The problem is solved.	Contact customer support.

Issues with supplies

Replace cartridge, printer region mismatch

To correct this problem, purchase a cartridge with the correct region that matches the printer region, or purchase a worldwide cartridge.

- The first number in the message after 42 indicates the region of the printer.
- The second number in the message after 42 indicates the region of the cartridge.

Table 8.1 Printer and toner cartridge regions

Region	Numeric code
Worldwide or Undefined region	0
North America (United States, Canada)	1
European Economic Area, Western Europe, Nordic countries, Switzerland	2
Asia Pacific	3
Latin America	4
Rest of Europe, Middle East, Africa	5
Australia, New Zealand	6
Invalid region	9

Note: To find the region settings of the printer and toner cartridge, print the print quality test pages. From the control panel, navigate to: **Settings** > **Troubleshooting** > **Print Quality Test Pages**.

Non-Xerox Parts and Supplies

The printer has detected a non-Xerox part or supply installed in the printer.

Your Xerox printer is designed to function best with genuine Xerox parts and supplies. Use of third-party parts or supplies can affect the performance, reliability, or life of the printer and its imaging components.

All life indicators are designed to function with Xerox parts and supplies and can deliver unpredictable results if third-party parts or supplies are used. Imaging component usage beyond the intended life may damage your Xerox printer or associated components.

Warning: Use of third-party supplies or parts can affect warranty coverage. Damage caused by the use of third-party supplies or parts may not be covered by the warranty.

To accept any and all of these risks and to proceed with the use of non-genuine supplies in your printer, press and hold X and OK simultaneously for 15 seconds.

If you do not want to accept these risks, then remove the third-party supply or part from your printer and install a genuine Xerox supply or part. For more information, refer to Using Genuine Xerox Parts and Supplies.

Clearing Jams

Avoiding Jams

Load Paper Properly

- Make sure that the paper lies flat in the tray.

Correct loading of paper	Incorrect loading of paper
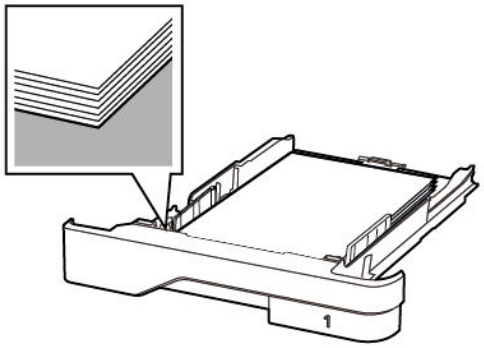	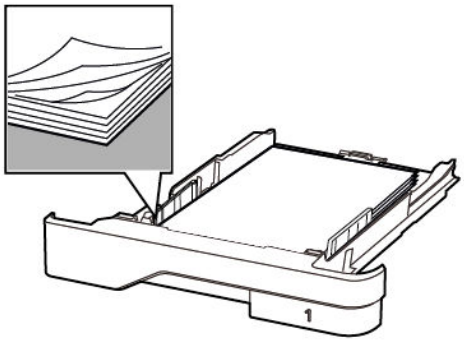

- Do not load or remove a tray while the printer is printing.
- Do not load too much paper. Make sure that the stack height is below the maximum paper fill indicator.
- Do not slide paper into the tray. Load paper as shown in the illustration.

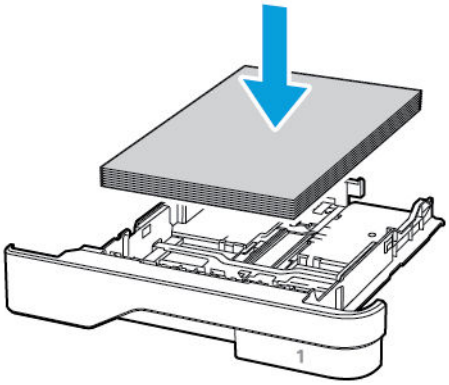

- Make sure that the paper guides are positioned correctly and are not pressing tightly against the paper or envelopes.
- Push the tray firmly into the printer after loading paper.

Use Recommended Paper

- Use only recommended paper or specialty media.
- Do not load paper that is wrinkled, creased, damp, bent, or curled.
- Flex, fan, and align the paper edges before loading.

- Do not use paper that has been cut or trimmed by hand.
- Do not mix paper sizes, weights, or types in the same tray.
- Make sure that the paper size and type are set correctly on the computer or printer control panel.
- Store paper according to manufacturer recommendations.

Identifying Jam Locations

- When Jam Assist is set to On, the printer flushes blank pages or pages with partial prints after a jammed page has been cleared. Check your printed output for blank pages.
- When Jam Recovery is set to On or Auto, the printer reprints jammed pages.

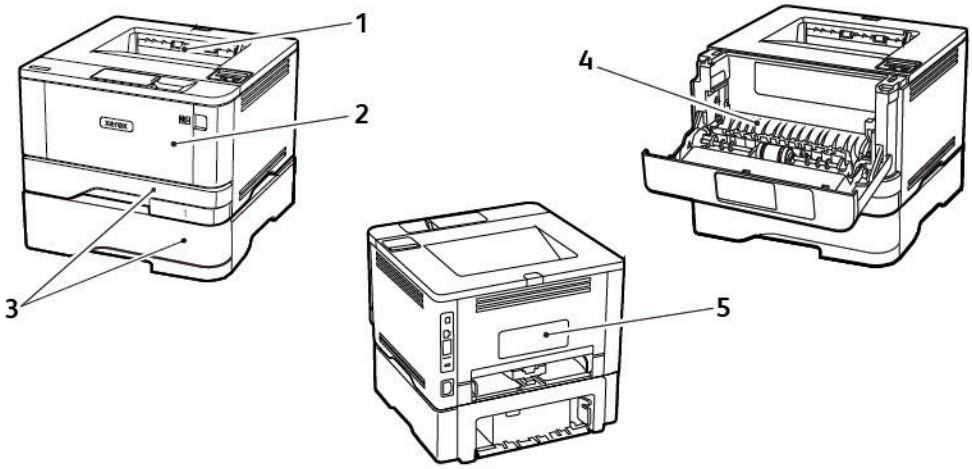

1. Standard output tray
2. Multipurpose feeder
3. Trays
4. Duplex unit
5. Rear door

Paper Jam in the Standard Output Tray

Remove the jammed paper.

Note: Make sure that all paper fragments are removed.

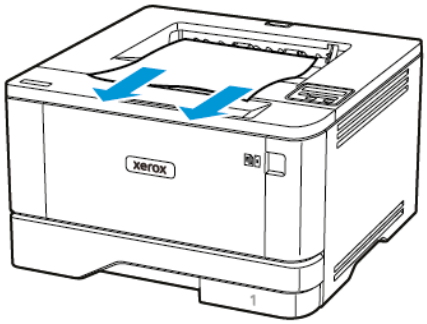

Paper Jam in the Multipurpose Feeder

1. Remove paper from the multipurpose feeder.

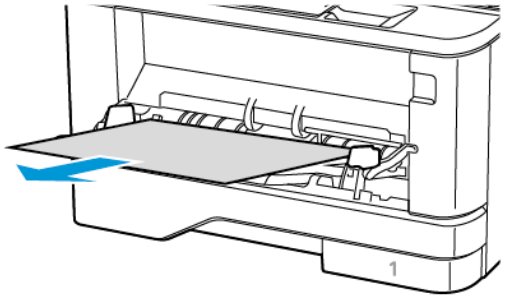

2. Remove the jammed paper.

   Note: Make sure that all paper fragments are removed.

3. Close the multipurpose feeder.

4. Open the front door.

Warning: To prevent damage from electrostatic discharge, touch any exposed metal frame of the printer before accessing or touching interior areas of the printer.

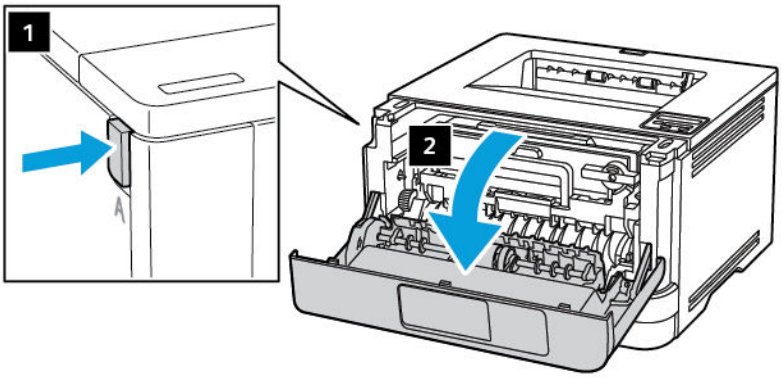

5. Remove the imaging unit.

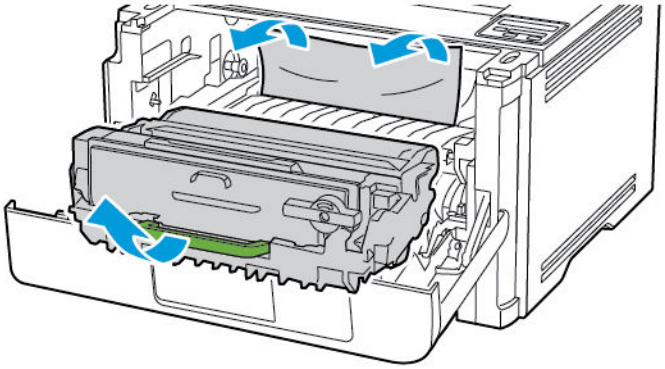

Warning: Do not expose the imaging unit to direct light for more than 10 minutes. Extended exposure to light may cause print quality problems.

Warning: Do not touch the photoconductor drum. Doing so may affect the quality of future print jobs.

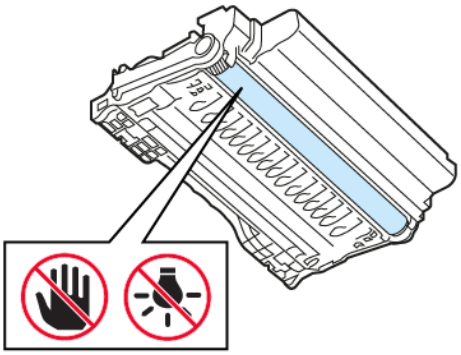

6. Remove the jammed paper.

CAUTION—HOT SURFACE: The inside of the printer might be hot. To reduce the risk of injury from a hot component, allow the surface to cool before touching it.

Note: Make sure that all paper fragments are removed.

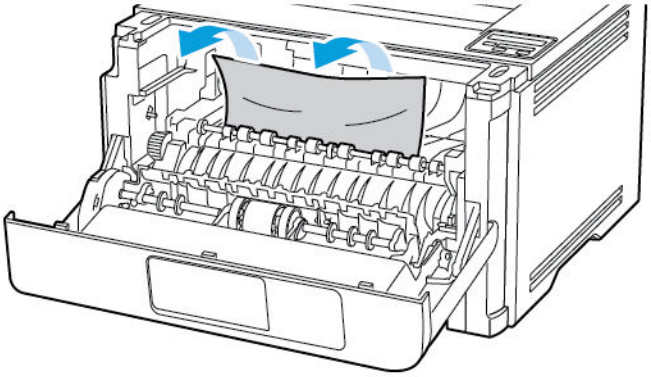

7. Insert the imaging unit.

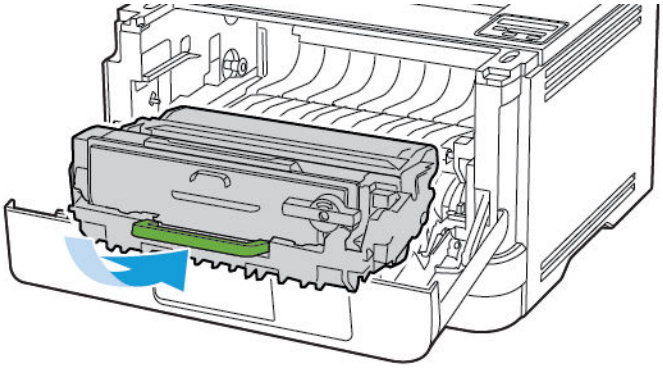

8. Close the door.
9. Open the multipurpose feeder.

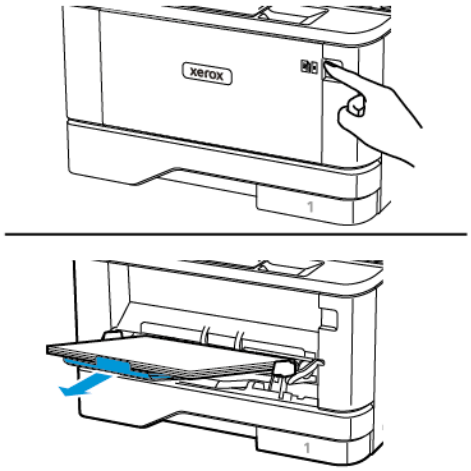

10. Flex, fan, and align the paper edges before loading.

11. Reload paper.

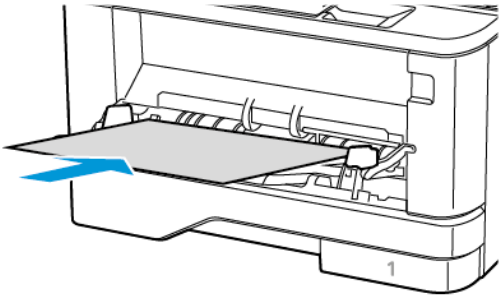

Paper Jam in Trays

1. Remove the tray.

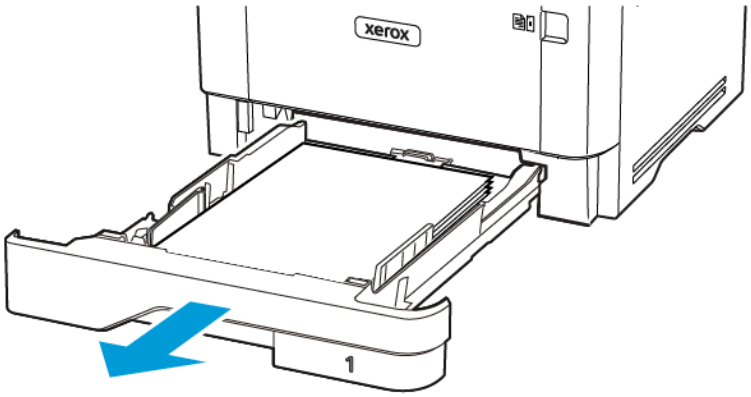

2. Open the front door.

Warning: To prevent damage from electrostatic discharge, touch any exposed metal frame of the printer before accessing or touching interior areas of the printer.

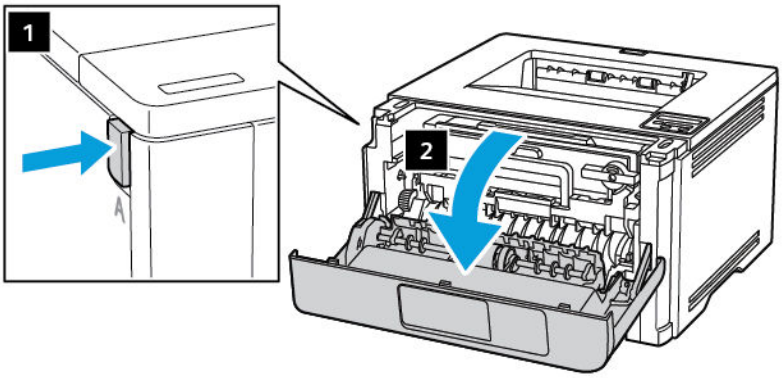

3. Remove the imaging unit.

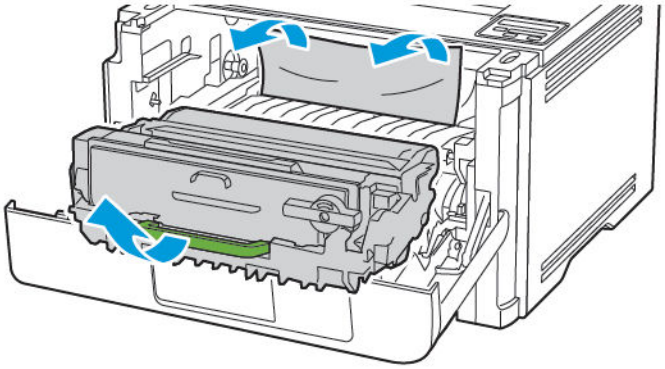

Warning: Do not expose the imaging unit to direct light for more than 10 minutes. Extended exposure to light may cause print quality problems.

Warning: Do not touch the photoconductor drum. Doing so may affect the quality of future print jobs.

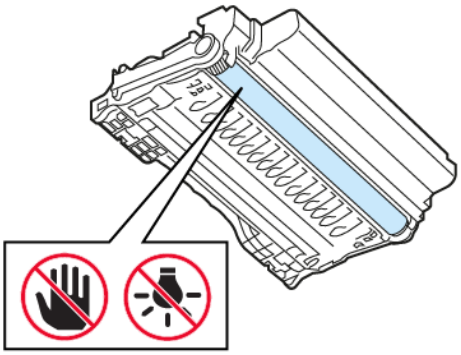

4. Remove the jammed paper.

CAUTION—HOT SURFACE: The inside of the printer might be hot. To reduce the risk of injury from a hot component, allow the surface to cool before touching it.

Note: Make sure that all paper fragments are removed.

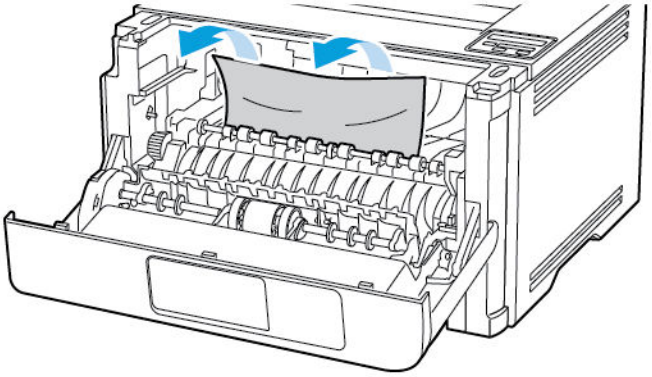

5. Insert the imaging unit.

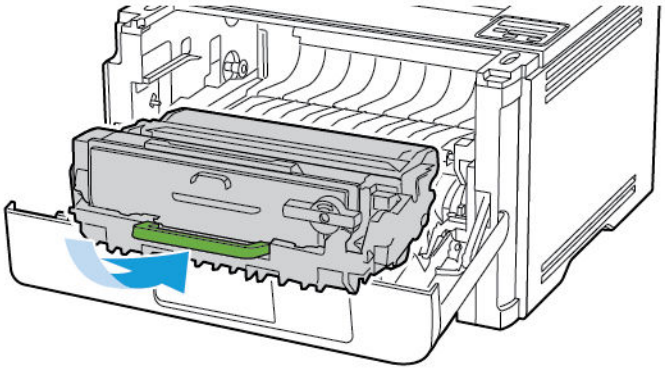

6. Close the front door, and then insert the tray.
7. Open the rear door.

CAUTION—HOT SURFACE: The inside of the printer might be hot. To reduce the risk of injury from a hot component, allow the surface to cool before touching it.

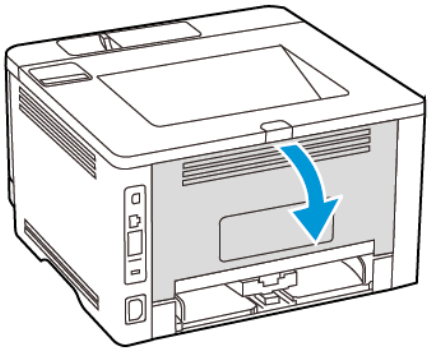

8. Remove the jammed paper.

   Note: Make sure that all paper fragments are removed.

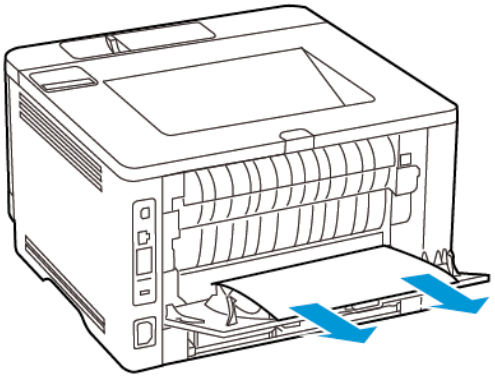

9. Close the rear door.
10. Remove the optional tray.

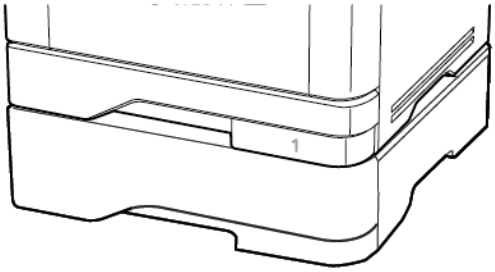

11. Remove the jammed paper.

    Note: Make sure that all paper fragments are removed.

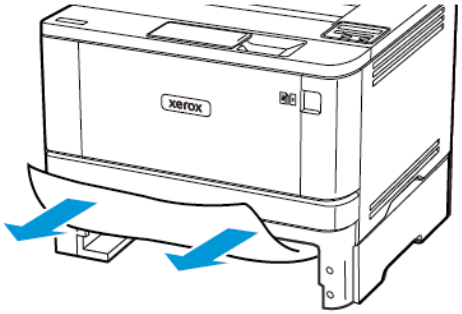

12. Insert the tray.

Paper Jam in the Duplex Unit

1. Open the front door.

Warning: To prevent damage from electrostatic discharge, touch any exposed metal frame of the printer before accessing or touching interior areas of the printer.

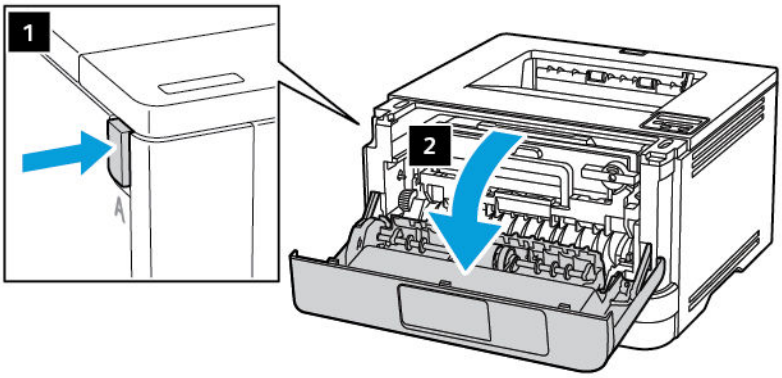

2. Remove the imaging unit.

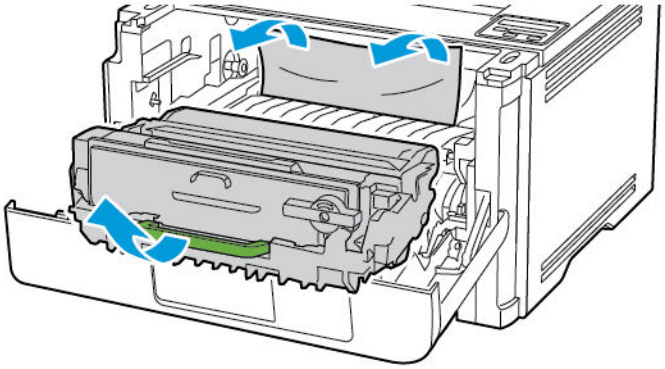

Warning: Do not expose the imaging unit to direct light for more than 10 minutes. Extended exposure to light may cause print quality problems.

Warning: Do not touch the photoconductor drum. Doing so may affect the quality of future print jobs.

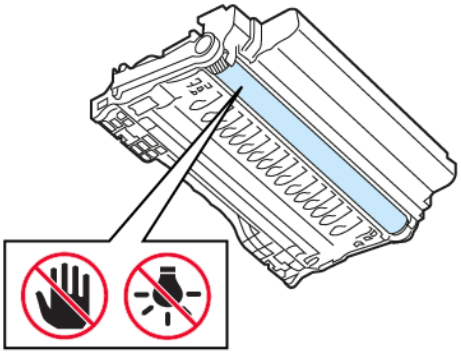

3. Remove the jammed paper.

CAUTION—HOT SURFACE: The inside of the printer might be hot. To reduce the risk of injury from a hot component, allow the surface to cool before touching it.

Note: Make sure that all paper fragments are removed.

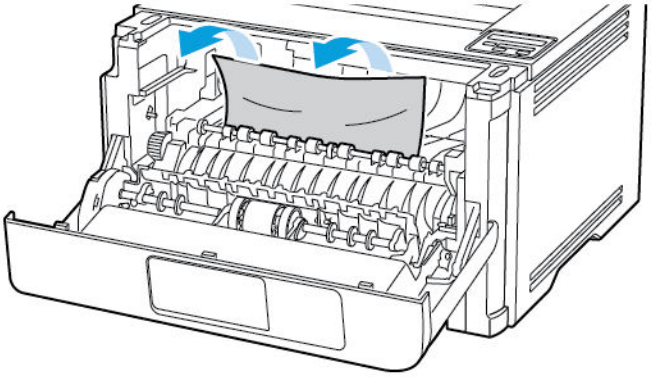

4. Insert the imaging unit.

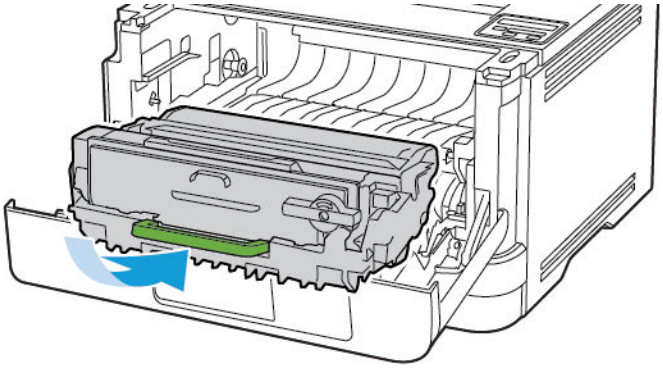

5. Close the door.
6. Remove the tray.

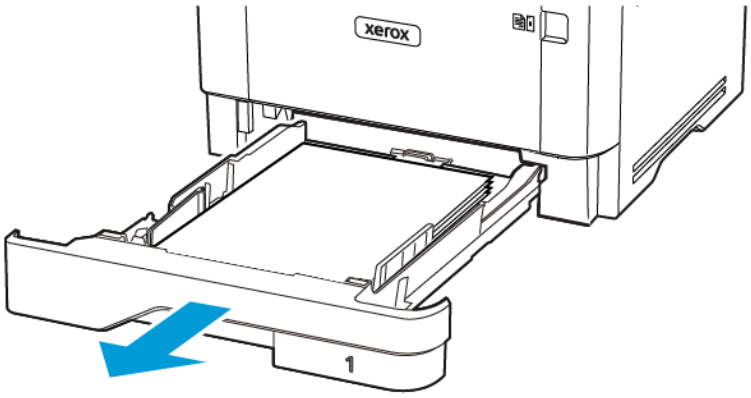

7. Push the duplex unit latch to open the duplex unit.

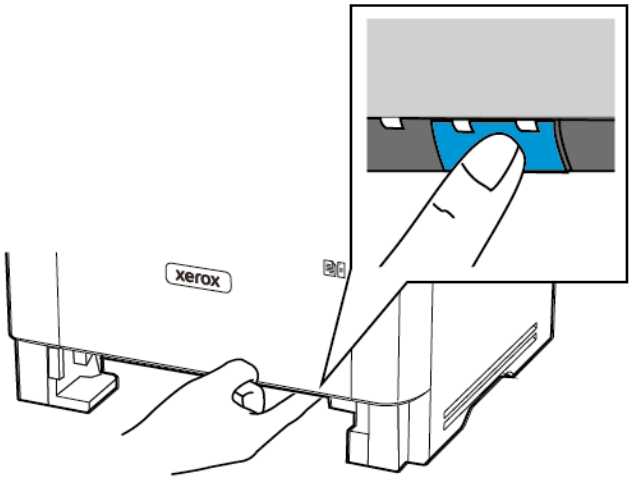

8. Remove the jammed paper.

Note: Make sure that all paper fragments are removed.

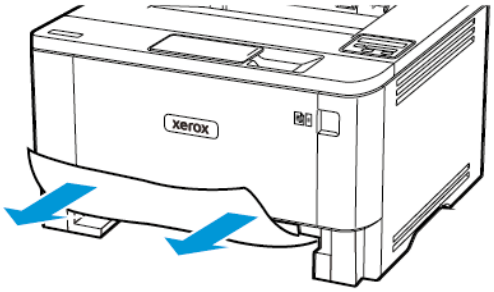

9. Close the duplex unit.
10. Insert the tray.

Paper Jam in the Rear Door

1. Open the front door.

Warning: To prevent damage from electrostatic discharge, touch any exposed metal frame of the printer before accessing or touching interior areas of the printer.

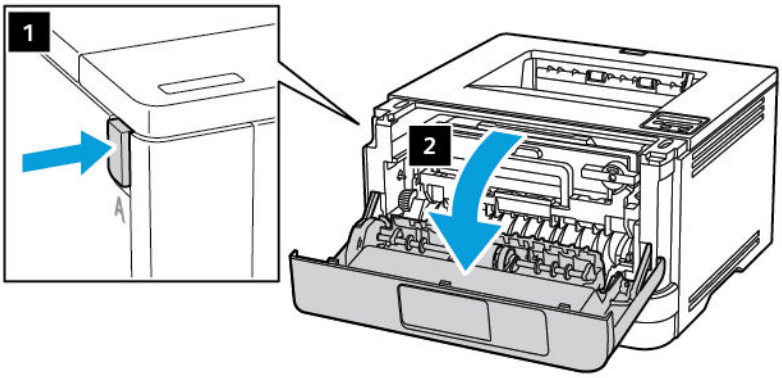

2. Remove the imaging unit.

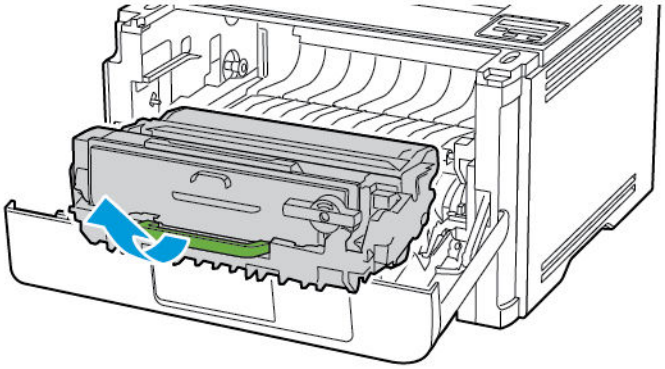

Warning: Do not expose the imaging unit to direct light for more than 10 minutes. Extended exposure to light may cause print quality problems.

Warning: Do not touch the photoconductor drum. Doing so may affect the quality of future print jobs.

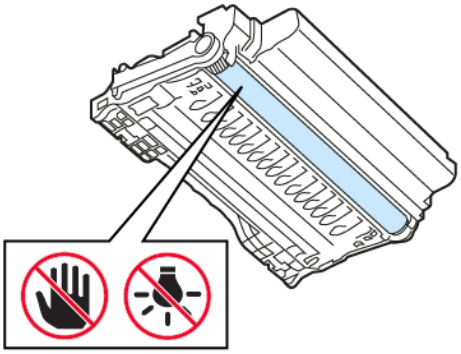

3. Open the rear door.

CAUTION—HOT SURFACE: The inside of the printer might be hot. To reduce the risk of injury from a hot component, allow the surface to cool before touching it.

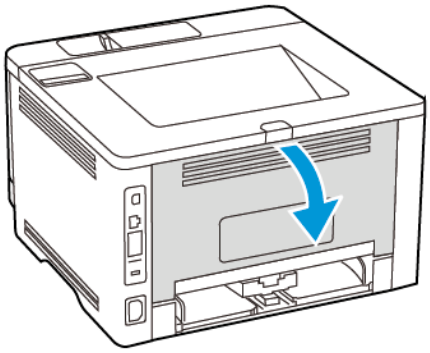

4. Remove the jammed paper.

Note: Make sure that all paper fragments are removed.

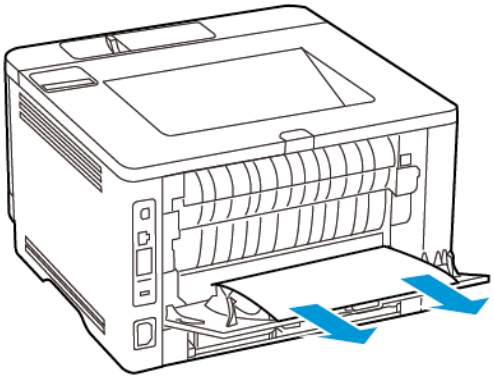

5. Close the rear door.
6. Insert the imaging unit.

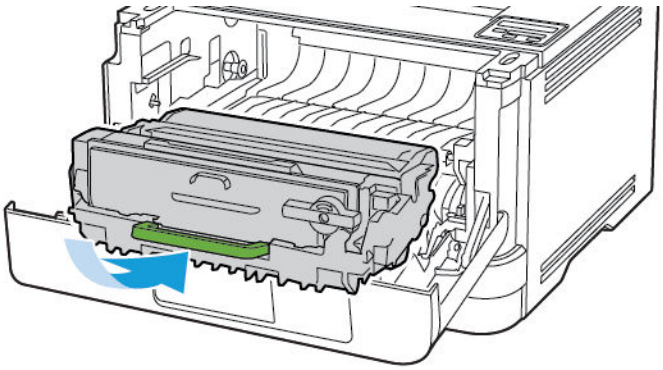

7. Close the front door.

Paper feed problems

Envelope Seals When Printing

Action	Yes	No
Step1 1 Use an envelope that has been stored in a dry environment. Printing on envelopes with high moisture content can seal the flaps. 2 Send the print job. Does the envelope seal when printing?	Go to step 2.	The problem is solved.
Step2 1 Make sure that paper type is set to Envelope. From the control panel, navigate to: **Settings > OK > Paper > OK > Tray Configuration > OK > Paper Size/Type > OK** 2 Send the print job. Does the envelope seal when printing?	Contact customer support.	The problem is solved.

Collated printing does not work

Action	Yes	No
Step 1 1 From the control panel, navigate to: **Settings** > OK > **Print** > OK > **Layout** > OK > **Collate** > OK 2 Set Collate to **On [1,2,1,2,1,2]**, and then press OK. 3 Print the document. Is the document collated correctly?	The problem is solved.	Go to step 2.
Step 2 1 From the document that you are trying to print, open the Print dialog, and then select **Collate**. 2 Print the document. Is the document collated correctly?	The problem is solved.	Go to step 3.
Step 3 1 Reduce the number of pages to print. 2 Print the document. Are the pages collated correctly?	The problem is solved.	Contact customer support.

Tray linking does not work

Action	Yes	No
Step 1 1 Check if the trays contain the same paper size and paper type. 2 Check if the paper guides are positioned correctly. 3 Print the document. Do the trays link correctly?	The problem is solved.	Go to step 2.
Step 2 1 From the control panel, navigate to: **Settings** > OK > **Paper** > OK > **Tray Configuration** > OK > **Paper Size/Type** > OK 2 Set the paper size and paper type to match the paper loaded in the linked trays. 3 Print the document. Do the trays link correctly?	The problem is solved.	Go to step 3.
Step 3 1 Make sure that Tray Linking is set to Automatic. For more information, see [File not referenced in map] _ATI_File_Not_Found_x-wc_–file=d@[sedona[wt_low_mono[sfp[dita[linking-and-unlinking-trays.dita]23task745.xml#task745. 2 Print the document. Do the trays link correctly?	The problem is solved.	Contact customer support.

Paper frequently jams

Action	Yes	No
Step 1 1 Remove the tray. 2 Check if paper is loaded correctly. • Make sure that the paper guides are positioned correctly. • Make sure that the stack height is below the maximum paper fill indicator. • Make sure to print on recommended paper size and type. 3 Insert the tray. 4 Print the document. Do paper jams occur frequently?	Go to step 2.	The problem is solved.
Step 2 1 From the control panel, navigate to: **Settings** > OK > **Paper** > OK > **Tray Configuration** > OK > **Paper Size/Type** > OK 2 Set the correct paper size and type. 3 Print the document. Do paper jams occur frequently?	Go to step 3.	The problem is solved.
Step 3 1 Load paper from a fresh package. Paper absorbs moisture due to high humidity. Store paper in its original wrapper until you are ready to use it. 2 Print the document. Do paper jams occur frequently?	Contact customer support.	The problem is solved.

Jammed pages are not reprinted

Action	Yes	No
1 From the control panel, navigate to: **Settings** > OK > **Device** > OK > **Notifications** > OK > **Jam Content Recovery** > OK 2 In the Jam Recovery menu, select **On** or **Auto**, and then press OK. Are the jammed pages reprinted?	The problem is solved.	Contact customer support.

Contacting customer support

Before contacting customer support, make sure to have the following information:

- Printer problem
- Error message
- Printer model type and serial number

To receive email, chat support, or to browse the supported documentation, drivers, and other downloads, go to www.xerox.com, click on the **Customer Support** link, and search for your product.

Technical support via telephone is also available. In the U.S. or Canada, go to www.xerox.com/supplies. For other countries or regions, go to or contact the place where you purchased the printer.

A

Regulatory Information

This appendix contains:

- Basic Regulations 176
- Material Safety Data Sheets 182

Basic Regulations

Noise Emission Levels

The following measurements were made in accordance with ISO 7779 and reported in conformance with ISO 9296.

Note: Some modes may not apply to your product.

1-meter Average Sound Pressure, dBA	
Printing	One-sided: 53 Two-sided: 50
Ready	14

Static Sensitivity Notice

This symbol identifies static-sensitive parts. Do not touch the areas near these symbols without first touching a metal surface in an area away from the symbol.

To prevent damage from electrostatic discharge when performing maintenance tasks, such as clearing paper jams or replacing supplies, touch any exposed metal frame of the printer before accessing or touching interior areas of the printer, even if the symbol is not present.

ENERGY STAR

Any Xerox product bearing the ENERGY STAR emblem on the product or on a start-up screen is certified to comply with Environmental Protection Agency (EPA) ENERGY STAR requirements as of the date of manufacture.

Temperature Information

Ambient operating temperature	10 to 32.2˚C (50 to 90˚F)
Shipping temperature	-40 to 40˚C (-40 to 104˚F)
Storage temperature and relative humidity	-40 to 40˚C (-40 to 104˚F) 8 to 80 % RH

Información de la energía de México

- Consumo de energía en operación: 570 Wh
- Consumo de energía en modo de espera: 0.1 Wh
- Cantidad de producto por unidad de energía consumida: 4.42 páginas/Wh

Laser Notice

The printer is certified in the U.S. to conform to the requirements of DHHS 21 CFR, Chapter I, Subchapter J for Class I (1) laser products, and elsewhere is certified as a Class I laser product conforming to the requirements of IEC 60825-1: 2014.

Class I laser products are not considered to be hazardous. The laser system and printer are designed so there is never any human access to laser radiation above a Class I level during normal operation, user maintenance, or prescribed service conditions. The printer has a non-serviceable printhead assembly that contains a laser with the following specifications:

- Class: IIIb (3b) AlGaInP
- Nominal output power (milliwatts): 25
- Wavelength (nanometers): 775–800

Power

Product Power Consumption

The following table documents the power consumption characteristics of the product.

Note: Some modes may not apply to your product.

Mode	Description	Power consumption (Watts)
Printing	The product is generating hard-copy output from electronic inputs.	One-sided: 570 Two-sided: 305
Ready	The product is waiting for a print job.	4.9
Sleep Mode	The product is in a high-level energy-saving mode.	0.9
Hibernate	The product is in a low-level energy-saving mode.	0.1
Off	The product is plugged into an electrical outlet, but the power switch is turned off.	0.1

The power consumption levels listed in the previous table represent time-averaged measurements. Instantaneous power draws may be substantially higher than the average.

Sleep Mode

This product is designed with an energy-saving mode called Sleep Mode. The Sleep Mode saves energy by lowering power consumption during extended periods of inactivity. The Sleep Mode is

automatically engaged after this product is not used for a specified period of time, called the Sleep Mode Timeout.

Note: Factory default Sleep Mode Timeout for this product is 15 minutes.

By using the configuration menus, the Sleep Mode Timeout can be modified between 1 minute and 120 minutes. If the print speed is less than or equal to 30 pages per minute, then you can set the timeout only up to 60 minutes. Setting the Sleep Mode Timeout to a low value reduces energy consumption, but may increase the response time of the product. Setting the Sleep Mode Timeout to a high value maintains a fast response, but uses more energy.

Hibernate Mode

This product is designed with an ultra-low power operating mode called Hibernate mode. When operating in Hibernate Mode, all other systems and devices are powered down safely.

The Hibernate mode can be entered in any of the following methods:

- Using the Hibernate Timeout
- Using the Schedule Power modes

Note: Factory default Hibernate Timeout for this product in all countries or regions is 3 days.

The amount of time the printer waits after a job is printed before it enters Hibernate mode can be modified between one hour and one month.

Off Mode

If this product has an off mode which still consumes a small amount of power, then to completely stop product power consumption, disconnect the power supply cord from the electrical outlet.

Total Energy Usage

It is sometimes helpful to estimate the total product energy usage. Since power consumption claims are provided in power units of Watts, the power consumption should be multiplied by the time the product spends in each mode in order to calculate energy usage. The total product energy usage is the sum of each mode's energy usage.

Regulatory Notices for Wireless Products

This section contains regulatory information that applies only to wireless models.

If in doubt as to whether your model is a wireless model, go to http://support.xerox.com.

Modular Component Notice

Wireless models contain modular components. To determine which modular components are installed in your particular product, refer to the labeling on your actual product.

Exposure to Radio Frequency Radiation

The radiated output power of this device is far below the radio frequency exposure limits of the FCC and other regulatory agencies. A minimum separation of 20 cm (8 inches) must be maintained between the antenna and any persons for this device to satisfy the RF exposure requirements of the FCC and other regulatory agencies.

Innovation, Science and Economic Development Canada

This device complies with Innovation, Science and Economic Development Canada license-exempt RSS standards. Operation is subject to the following two conditions:

1. This device may not cause interference, and
2. This device must accept any interference, including interference that may cause undesired operation of the device.

Innovation, Sciences et Développement économique Canada

Cet appareil est conforme aux normes RSS exemptes de licence d'Innovation, Sciences et Développement économique Canada. Son fonctionnement est soumis aux deux conditions suivantes:

1. Cet appareil ne doit pas causer d'interférences et
2. Il doit accepter toutes les interférences, y compris les celles qui peuvent entraîner un fonctionnement indésirable.

European Union and European Economic Area Compliance

The CE mark applied to this product indicates compliance to applicable EU Directives. The full text of the EU Declaration of Conformity is located at https://www.xerox.com/en-us/about/ehs.

EU and Other Countries Statement of Radio Transmitter Operational Frequency Bands and Maximum RF Power

This radio product transmits in either the 2.4GHz (2.412–2.472 GHz in the EU) or 5GHz (5.15–5.35, 5.47–5.725 in the EU) bands. The maximum transmitter EIRP power output, including antenna gain, is ≤ 20dBm for both bands.

Federal Communications Commission (FCC) Compliance Information Statement

This product has been tested and found to comply with the limits for a Class B digital device, pursuant to Part 15 of the FCC Rules. Operation is subject to the following two conditions:

1. This device may not cause harmful interference, and
2. This device must accept any interference received, including interference that may cause undesired operation.

The FCC Class B limits are designed to provide reasonable protection against harmful interference when the equipment is operated in a residential installation. This equipment generates, uses, and can

radiate radio frequency energy and, if not installed and used in accordance with the instructions, may cause harmful interference to radio communications. However, there is no guarantee that interference will not occur in a particular installation. If this equipment does cause harmful interference to radio or television reception, which can be determined by turning the equipment off and on, the user is encouraged to try to correct the interference by one or more of the following measures:

- Reorient or relocate the receiving antenna.
- Increase the separation between the equipment and receiver.
- Connect the equipment into an outlet on a circuit different from that to which the receiver is connected.
- Consult your point of purchase or service representative for additional suggestions.

The manufacturer is not responsible for radio or television interference caused by using other than recommended cables or by unauthorized changes or modifications to this equipment. Unauthorized changes or modifications could void the user's authority to operate this equipment.

Note: To assure compliance with FCC regulations on electromagnetic interference for a Class B computing device, use a properly shielded and grounded cable. Use of a substitute cable not properly shielded and grounded may result in a violation of FCC regulations.

For more information on Environment, Health, and Safety in relation to this Xerox product and supplies, contact the following:

Web address: https://www.xerox.com/en-us/about/ehs

Call (US and Canada only): 1–800–ASK-XEROX (1–800–275–9376)

Email: EHS-Europe@xerox.com

Innovation, Science and Economic Development Canada Compliance Statement

This Class B digital apparatus meets all requirements of the Canadian Interference-Causing Equipment Standard ICES-003.

Avis de conformité aux normes de l'Innovation, Sciences et Développement économique Canada

Cet appareil numérique de classe B est conforme aux exigences de la norme canadienne relative aux équipements pouvant causer des interférences NMB-003.

Germany

Germany - Blue Angel

RAL, the German Institute for Quality Assurance and Labeling, has awarded the following configuration of this device the Blue Angel Environmental Label:

Network printer with automatic 2-sided printing and USB or network connectivity.

This label distinguishes it as a device that satisfies Blue Angel criteria for environmental acceptability in terms of device design, manufacture, and operation. For more information, go to www.blauer-engel.de.

Blendschutz

Das Gerät ist nicht für die Benutzung im unmittelbaren Gesichtsfeld am Bildschirmarbeitsplatz vorgesehen. Um störende Reflexionen am Bildschirmarbeitsplatz zu vermeiden, darf dieses Produkt nicht im unmittelbaren Gesichtsfeld platziert werden.

Importeur

Xerox GmbH

Hellersbergstraße 2-4

41460 Neuss

Deutschland

Turkey RoHS Regulation

In compliance with Article 7 (d), we hereby certify “it is in compliance with the EEE regulation.”

“EEE yönetmeliğine uygundur.”

Ukraine RoHS Compliance

Обладнання відповідаєвимогам Технічного регламенту щодо обмеження

використання деяких небезпечних речовин в електричному та електронному

обладнані, затвердженого постановою Кабінету Міністрів України від 3 грудня

2008 № 1057.

(The equipment complies with requirements of the Technical Regulation, approved by the Resolution of Cabinet of Ministry of Ukraine as of December 3, 2008, in terms of restrictions for the use of certain dangerous substances in electrical and electronic equipment.)

Material Safety Data Sheets

For Material Safety Data information regarding your printer, go to:

- Web Address: https://safetysheets.business.xerox.com/en-us/
- United States and Canada: 1-800-ASK-XEROX (1-800-275-9376)
- Other markets, send an email request to EHS-Europe@xerox.com

B

Recycling and Disposal

This appendix contains:

- Product Disposal and Recycling 184
- North America 185
- Xerox Green World Alliance 186
- Waste from Electrical and Electronic Equipment (WEEE) Directive 187

Product Disposal and Recycling

Do not dispose of the printer or supplies in the same manner as normal household waste. Consult your local authorities for disposal and recycling options.

North America

Xerox operates an equipment take-back and reuse and recycle program. Contact your Xerox representative (1–800–ASK-XEROX) to determine if this Xerox product is part of the program. For more information about Xerox environmental programs, go to https://www.xerox.com/en-us/about/ehs.

Xerox Green World Alliance

The Xerox Green World Alliance Program allows you to return qualified supplies to Xerox for reuse or recycling. One hundred percent of the empty cartridges returned to Xerox are either reused or de-manufactured for recycling. The boxes used to return the cartridges are also recycled.

To return Xerox cartridges for reuse or recycling, do the following:

1. Go to https://www.xerox.com/office/recycle.
2. Click **Recycling**.
3. Select an option for return.

Waste from Electrical and Electronic Equipment (WEEE) Directive

The WEEE logo signifies specific recycling programs and procedures for electronic products in countries of the European Union. We encourage the recycling of our products.

If you have further questions about recycling options, contact your local sales office.

India E-Waste notice

This product including components, consumables, parts and spares complies with the “India E-Waste Rules” and prohibits use of lead, mercury, hexavalent chromium, polybrominated biphenyls or polybrominated diphenyl ethers in concentrations exceeding 0.1 % by weight and 0.01 % by weight for cadmium, except for the exemption set in the Rule.

xerox™