Floe DX RGB 240 TT Premium Edition

Patented RGB 16.8 Million Color

Parts List

A x1 B x1 C x1 D x1 E x1 F x4 G x4 H x4 I x1 J x1 K x2 L x8 M x8 N x8 O x2 P x1 Q x1 R x1

Intel Installation

Intel (Socket LGA 1366/1156/1155/1151/1150) Installation

For **LGA2066/2011** installation, skip step 1, 2 and continue with step 3

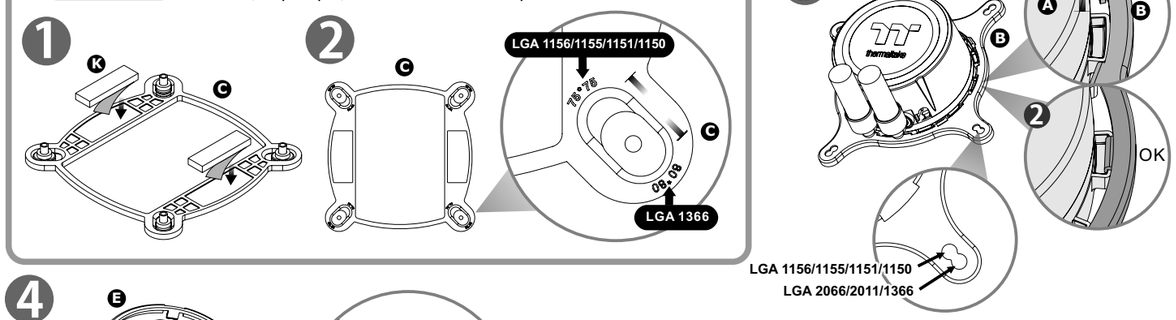

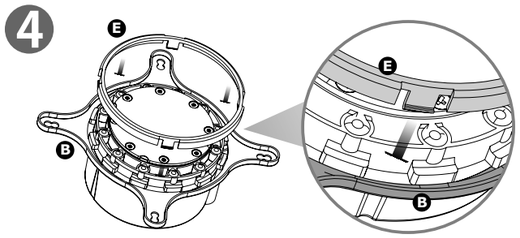

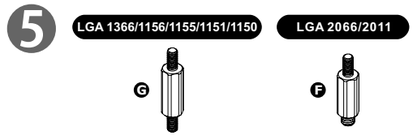

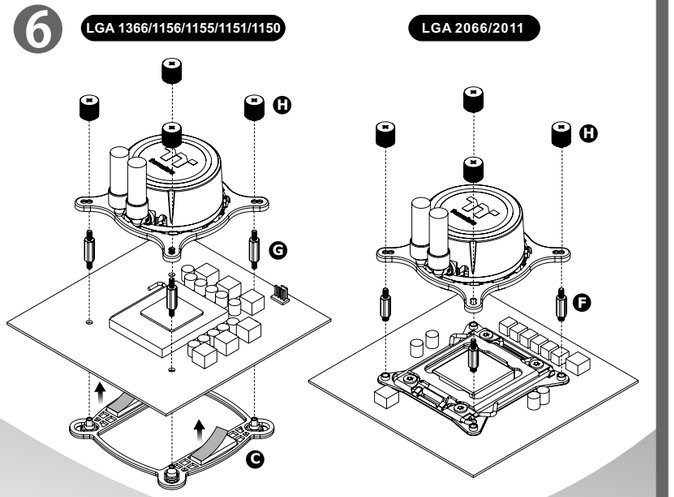

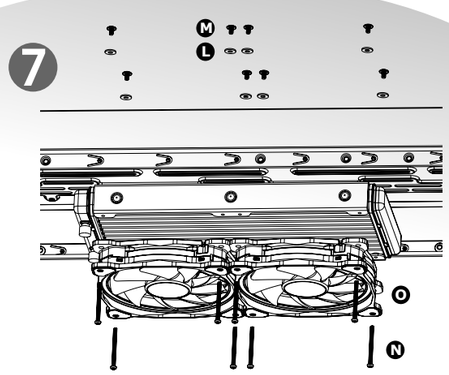

Compatibility may vary based on chassis design.

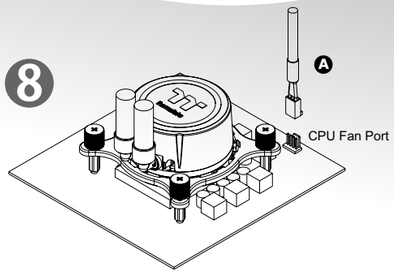

AMD Installation

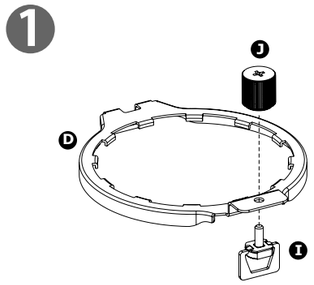

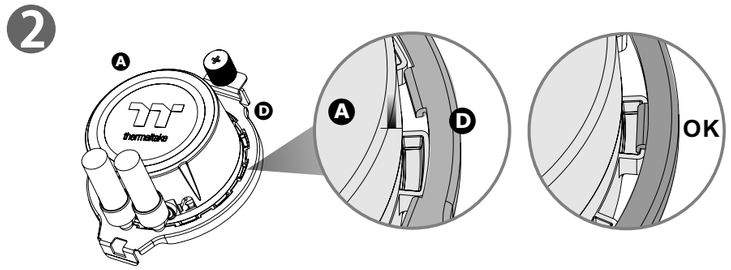

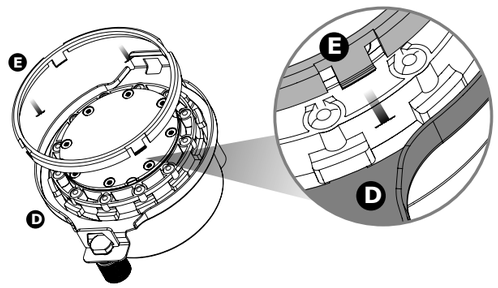

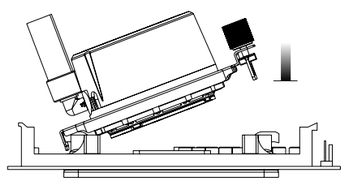

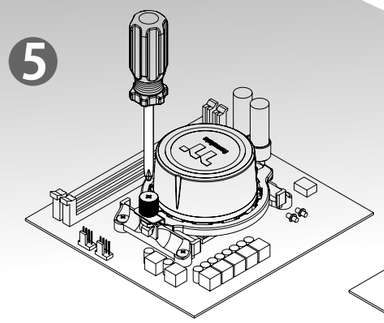

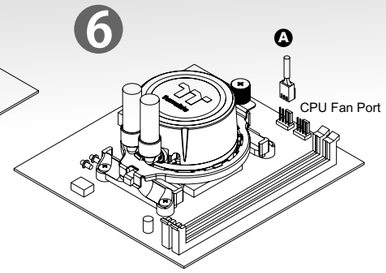

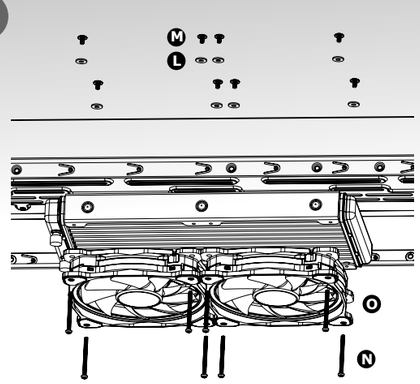

Compatibility may vary based on chassis design.

© 2019 Thermaltake Technology Co., Ltd. All Rights Reserved. www.thermaltake.com A-2017.06

RoHS COMPLIANT

Floe DX RGB 240 TT Premium Edition

Patented RGB 16.8 Million Color

Controller Installation

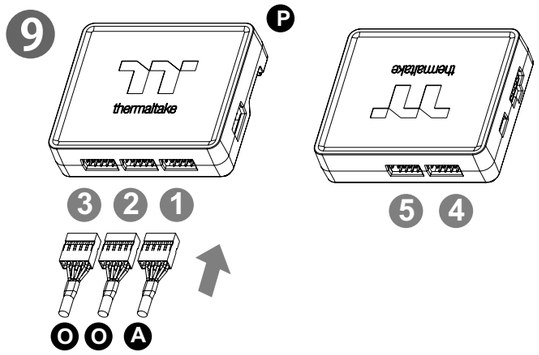

Connect the plug into the port in numerical order, start with plug one.

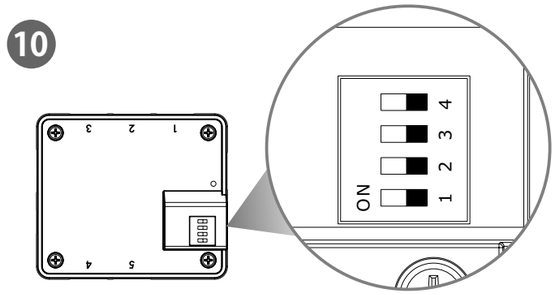

Set the DIP switch on the back side of the controller to assign the number of the controller

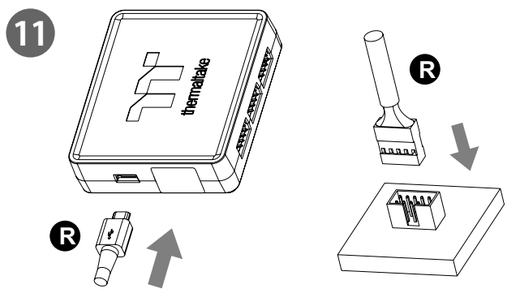

Connect the controller cable onto the mainboard (USB 2.0, 9 pin) and the controller.

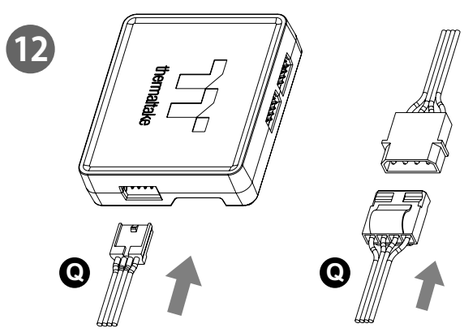

Connect the power cable to the 4pin Molex connecter and the controller.

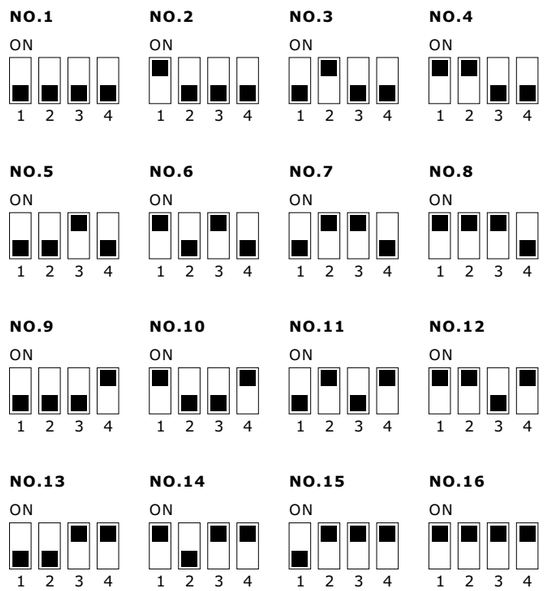

TT RGB Plus Software control interface

Please download software from Thermaltake Official website.
www.thermaltake.com/home.aspx
and search " **TT RGB Plus** " on the official website.
OS compatibility: Windows 7 / 8 / 8.1 / 10

When you open the software, choose the "Floe Riing RGB" in the drop-down list(C-4) first.

1. Software User Interface

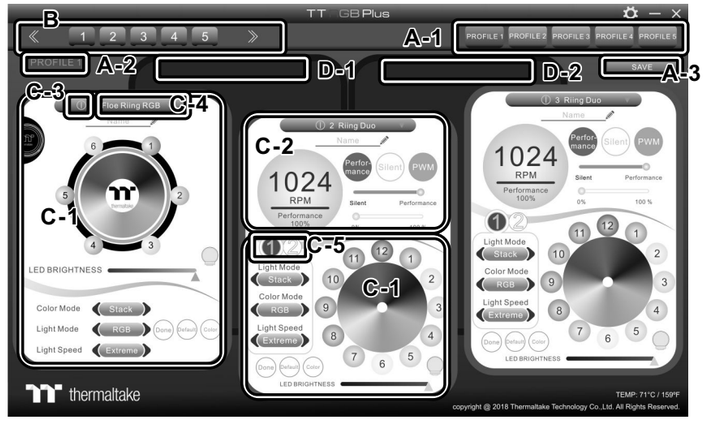

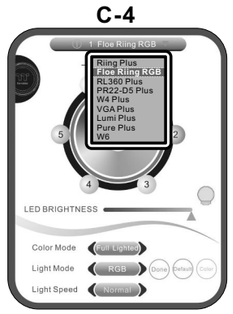

A. TT RGB Plus software Profile Setting

A-1 Set up a profile: Choose a Profile and set up the LED Lighting Mode, then click the SAVE icon(A-3) to store your settings to the software.

A-2 Save a profile to controller: Select a profile and a controller, then click the Save icon to assign the profile to the controller.

B. Follow the Installation Guide step 3, you can set up the number of the controller

C. LED Lighting Mode

Full Lighted / Wave / Pulse / Ripple / Microphone / Sound effect / RGB Spectrum / Flow/etc..

C-1 LED Selection: set up the LEDs lighting, color, and speed.
Light Mode: Choose a lighting mode
Color Mode: Choose the LEDs color
Light Speed: Set up the speed of the LEDs light
LED Spot & Color Palette: Choose the color of each of the individual LEDs by clicking the color palette
Done: Save your setting
Default: Reset the LED setting back to the default
Brightness: Drag the mouse to adjust LED light brightness.
LED On/Off: Click the LED Light icon to turn on or off the LED light
RGB Color Code: Enter the Decimal Code of Red, Green, and Blue to set the LEDs color

C-2 Performance Mode: 500~1500RPM(Duty cycle0%~100%)
Silent Mode: 500~900RPM(Duty cycle0%~50%)
PWM Mode: The PWM function can be turned off and set the fan speed manually

C-3 LED On/Off: User can switch off the LED control function in the software if the fan is not plug into the controller.

C-4 Product Selection: click the product name to choice another you want.

C-5 Fan LED Ring Selection: Choose different fan ring to setting the lighting modes.

D-1 & D-2. Product Selection: click the control panel to rotate it to the front

2. Mobile APP Connection Password

To connect the TT RGB Plus APP, please connect the PC to your wireless first, and click the Password setting under the software setting menu, set up your connection password. The TT RGB Plus APP will ask for your password every time when starting the APP.

For more information please visit www.thermaltake.com

software interface may vary with feature update, please download the latest user manual from our www.thermaltake.com

© 2019 Thermaltake Technology Co., Ltd. All Rights Reserved. www.thermaltake.com A-2017.06
RoHS COMPLIANT